MODEL SPECIFICATION

# A45146(112-1500x0650) – Sorting Table Recessed 1500mm (L) x 650mm (W)

| DOCUMENT SCOPE | DOCUMENT REFERENCE | DATA STATUS | GENERATED ON |
|---|---|---|---|
| Model | A45146(112-1500x0650){PSS} | Published catalogue data | 15 Oct 2026 |

## 01 Model specification

Sorting Table Stainless Steel Grade 304 Heavy Duty 1.2mm Thickness 1500mm (L) x 650mm (W) x 1000mm (H) with 100mm Recess and 300mm (W) Outlet at One End.

The legs at the outlet end are set back from the top to create an overhang and provide space to position a receiving container beneath the opening. The full stainless steel underframework includes cross bracing and round tubular legs with a Ø38.1mm outside diameter. Black plastic adjustable feet allow the table to be levelled. Overall height is 1000mm to the top edge. The 100mm recess places the working surface at 900mm above floor level.

## 02 Technical specifications

| PARAMETER | VALUE | UNIT | TECHNICAL NOTE |
|---|---|---|---|
| **Working Height** | 900 | mm | Recessed working-surface height: 1000mm overall height less the 100mm recess. |
| **Overall height** | 1000 | mm | Overall height measured to the top edge. |
| **Length** | 1500 | mm | The length of the item typically as measured from left to right. |
| **Width** | 650 | mm | The width of the item typically as measured from front to back. |
| **Material** | Stainless Steel Grade 304 | – | Material of the sorting-table worktop. |
| **Material Thickness** | 1.2 | mm | Thickness of the stainless steel worktop. |
| **Product Range** | Heavy Duty | – | Heavy duty construction. |
| **Recessed Slab Depth** | 100 | mm | Vertical depth from the top edge to the recessed working surface. |
| **Slab Edge** | Deep Recess with End Outlet | – | A deep recessed top with a 300mm wide opening at one end. |
| **Framework Material** | Stainless Steel | – | Full stainless steel underframework. |
| **Cross Bracing** | Yes | – | Cross bracing is included in the underframework. |


121 Koornhof Road, Meadowdale, Germiston, South Africa, 1614 · hello@basterfield.co.za · basterfield.co.za · +27 87 095 5357

## 02 Technical specifications

| PARAMETER | VALUE | UNIT | TECHNICAL NOTE |
|---|---|---|---|
| **Leg Profile** | Round Tubular | – | Round tubular stainless steel legs with a Ø38.1mm outside diameter. |
| **Leg Diameter** | 38.1 | mm | Outside diameter of the round tubular stainless steel legs. |
| **Feet Material** | Black Plastic | – | Black plastic levelling feet. |
| **Adjustable Feet** | Yes | – | Feet adjust to level the table. |
| **Outlet Width** | 300 | mm | Width of the open discharge section at one end of the recessed top. |
| **Outlet Position** | One End | – | The outlet is an opening in the end wall of the recessed worktop. |
| **Outlet-End Leg Arrangement** | Inset to Provide Overhang | – | The legs at the outlet end are set back from the top to create an overhang and provide space to position a receiving container beneath the opening. |

## 03 Dimensions and mass

| PARAMETER | VALUE | UNIT |
|---|---|---|
| **Length** | 1500 | mm |
| **Width** | 650 | mm |
| **Overall height** | 1000 | mm |

## 04 Model and supply data

| | |
|---|---|
| **Parent product** | A45146(112) – Heavy Duty Recessed Sorting Table with End Outlet |
| **Typical lead time** | 10–15 working days |
| **Warranty** | 24 months |


121 Koornhof Road, Meadowdale, Germiston, South Africa, 1614 · hello@basterfield.co.za · basterfield.co.za · +27 87 095 5357

## 05 Specification notes

**Configuration description**

This sorting table measures 1500mm long x 650mm wide x 1000mm overall height. A heavy duty manual sorting table with a 1.2mm Grade 304 stainless steel worktop and a 100mm deep recess. The recessed area helps contain food items during sorting, inspection and separation.

A 300mm wide opening at one end lets operators move sorted food items from the recessed surface into a crate or other receiving container below. The legs at the outlet end are set back from the top to create an overhang and provide space to position a receiving container beneath the opening.

The full stainless steel underframework includes cross bracing and round tubular legs with a Ø38.1mm outside diameter. Black plastic adjustable feet allow the table to be levelled.

Overall height is 1000mm to the top edge. The 100mm recess places the working surface at 900mm above floor level.

Standard lengths are 1200, 1500, 1800, 2000 and 2400mm, with widths of 600, 650 or 700mm. A 750mm width and other nonstandard sizes are custom and subject to quotation.

**Short Form Specification**

**SPECIFICATION USE**
Use this description when specifying this model.

Sorting Table Stainless Steel Grade 304 Heavy Duty 1.2mm Thickness 1500mm (L) x 650mm (W) x 1000mm (H) with 100mm Recess and 300mm (W) Outlet at One End.

**Detailed specification**

- Worktop: Stainless Steel Grade 304
- Construction: Heavy Duty
- Worktop thickness: 1.2mm
- Length: 1500mm
- Width: 650mm
- Overall height to top edge: 1000mm
- Recessed working surface height: 900mm
- Recess depth: 100mm
- Outlet width: 300mm
- Outlet position: One End
- Outlet-end legs: Inset to provide an overhang for receiving-container access
- Underframework: Full Stainless Steel
- Cross bracing: Included
- Legs: Round Tubular, Ø38.1mm Outside Diameter
- Feet: Black Plastic, Adjustable for Levelling


121 Koornhof Road, Meadowdale, Germiston, South Africa, 1614 · hello@basterfield.co.za · basterfield.co.za · +27 87 095 5357

## Product drawings and images

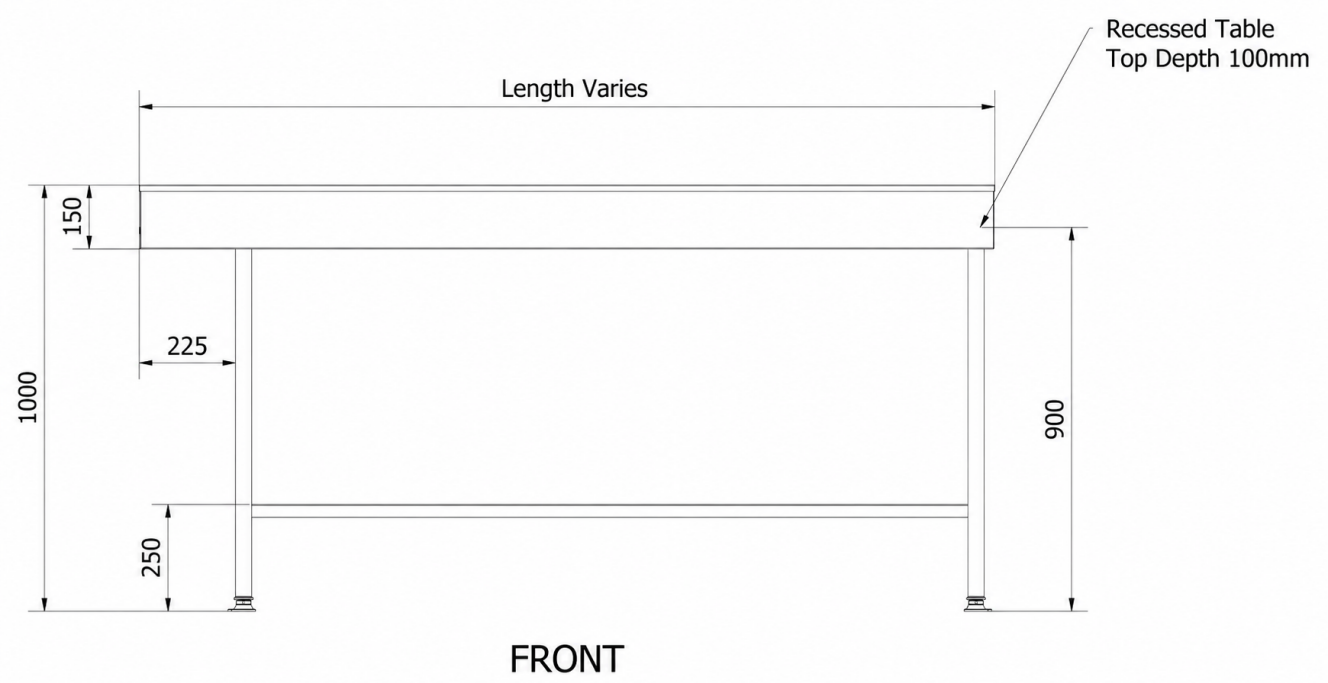


**FRONT VIEW** · Range front view. Length varies by configuration; overall height is 1000mm, working-surface height is 900mm and recess depth is 100mm. Fixed dimensions are in millimetres.

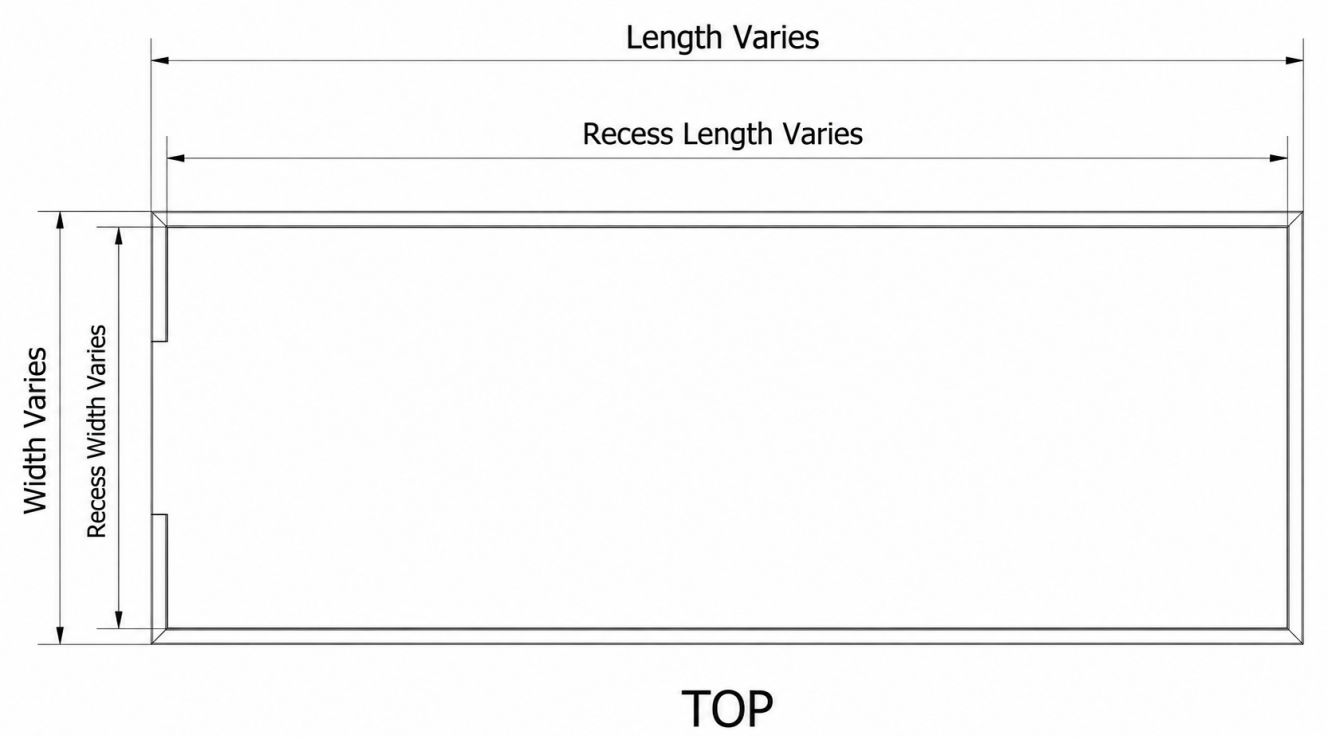


**TOP VIEW** · Range top view. Overall length and width, and recessed working-area length and width, vary by configuration.

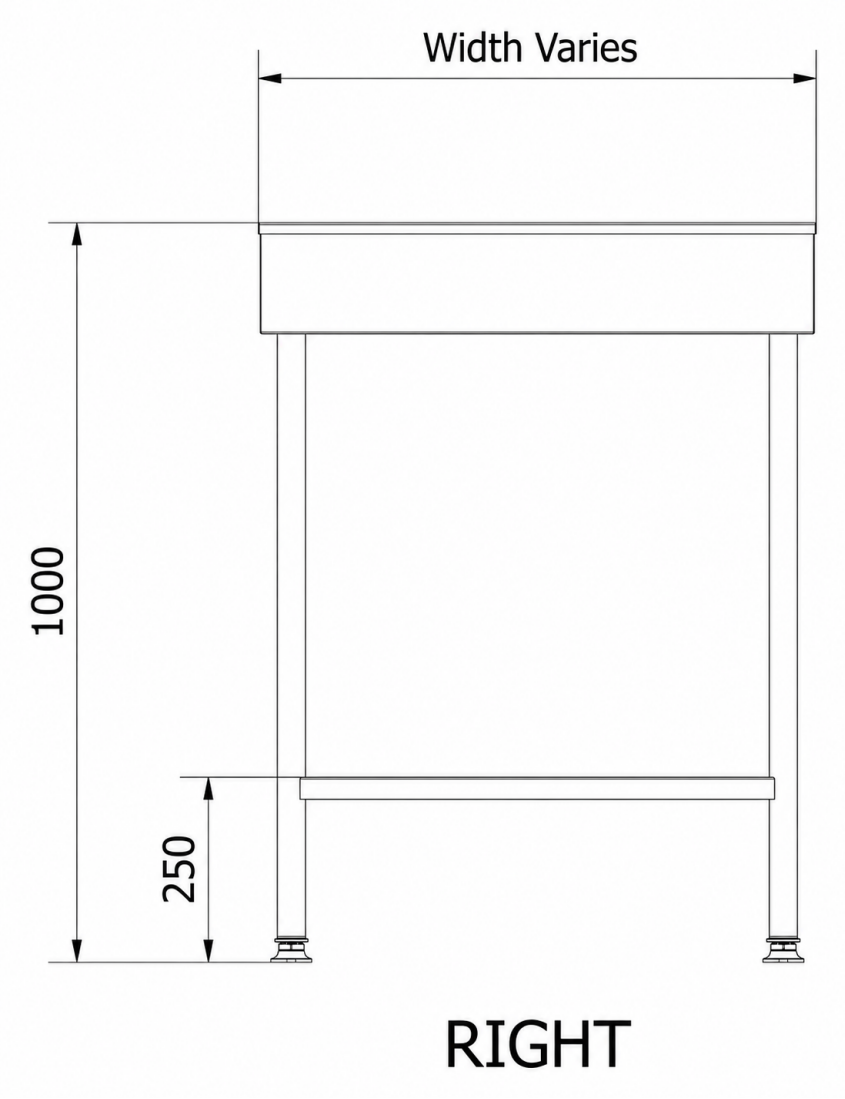


**RIGHT VIEW** · Range right view. Width varies by configuration; overall height is 1000mm. Fixed dimensions are in millimetres.

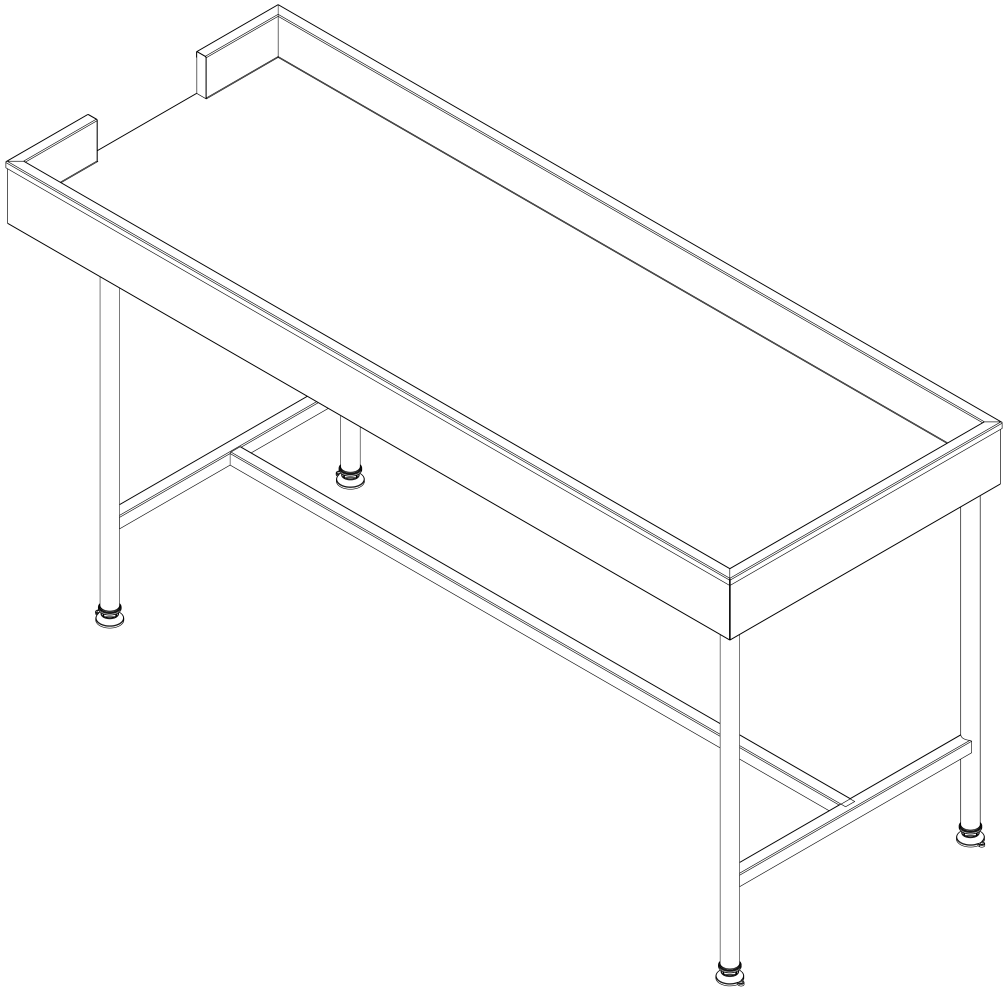

# TOP RIGHT

**ISOMETRIC VIEW** · Representative isometric view of the recessed sorting table and stainless steel underframework. Length and width vary by configuration.

**VERIFICATION REQUIRED** Published values are provided for initial specification. Confirm the selected model, critical dimensions, site services, clearances, and the latest document revision with Basterfield before procurement, manufacture, or installation. E&OE. Specifications are subject to change without notice.


121 Koornhof Road, Meadowdale, Germiston, South Africa, 1614 · hello@basterfield.co.za · basterfield.co.za · +27 87 095 5357