MODEL SPECIFICATION

A45146(112-1800x0700) – Sorting Table Recessed 1800mm (L) x 700mm (W)

DOCUMENT SCOPE	DOCUMENT REFERENCE	GENERATED ON
Model	A45146(112-1800x0700){PSS}	25 Nov 2026

01 Model specification

Sorting Table Stainless Steel Grade 304 Heavy Duty 1.2mm Thickness 1800mm (L) x 700mm (W) x 1000mm (H) with 100mm Recess and 300mm (W) Outlet at One End.

The legs at the outlet end are set back from the top to create an overhang and provide space to position a receiving container beneath the opening. The full stainless steel underframework includes cross bracing and round tubular legs with a Ø38.1mm outside diameter. Black plastic adjustable feet allow the table to be levelled. Overall height is 1000mm to the top edge. The 100mm recess places the working surface at 900mm above floor level.

02 Technical specifications

PARAMETER	VALUE	UNIT	TECHNICAL NOTE
Working Height	900	mm	Recessed working-surface height: 1000mm overall height less the 100mm recess.
Overall height	1000	mm	Overall height measured to the top edge.
Length	1800	mm	The length of the item typically as measured from left to right.
Width	700	mm	The width of the item typically as measured from front to back.
Material	Stainless Steel Grade 304	–	Material of the sorting-table worktop.
Material Thickness	1.2	mm	Thickness of the stainless steel worktop.
Product Range	Heavy Duty	–	Heavy duty construction.
Recessed Slab Depth	100	mm	Vertical depth from the top edge to the recessed working surface.
Slab Edge	Deep Recess with End Outlet	–	A deep recessed top with a 300mm wide opening at one end.
Framework Material	Stainless Steel	–	Full stainless steel underframework.
Cross Bracing	Yes	–	Cross bracing is included in the underframework.

121 Koornhof Road, Meadowdale, Germiston, South Africa, 1614 · hello@basterfield.co.za · basterfield.co.za · +27 87 095 5357

02 Technical specifications

PARAMETER	VALUE	UNIT	TECHNICAL NOTE
Leg Profile	Round Tubular	—	Round tubular stainless steel legs with a Ø38.1mm outside diameter.
Leg Diameter	38.1	mm	Outside diameter of the round tubular stainless steel legs.
Feet Material	Black Plastic	—	Black plastic levelling feet.
Adjustable Feet	Yes	—	Feet adjust to level the table.
Outlet Width	300	mm	Width of the open discharge section at one end of the recessed top.
Outlet Position	One End	—	The outlet is an opening in the end wall of the recessed worktop.
Outlet-End Leg Arrangement	Inset to Provide Overhang	—	The legs at the outlet end are set back from the top to create an overhang and provide space to position a receiving container beneath the opening.

03 Dimensions and mass

PARAMETER	VALUE	UNIT
Length	1800	mm
Width	700	mm
Overall height	1000	mm

04 Model and supply data

Parent product	A45146(112) — Heavy Duty Recessed Sorting Table with End Outlet
Typical lead time	10–15 working days
Warranty	24 months

05 Specification notes

Configuration description

This sorting table measures 1800mm long x 700mm wide x 1000mm overall height. A heavy duty manual sorting table with a 1.2mm Grade 304 stainless steel worktop and a 100mm deep recess. The recessed area helps contain food items during sorting, inspection and separation.

A 300mm wide opening at one end lets operators move sorted food items from the recessed surface into a crate or other receiving container below. The legs at the outlet end are set back from the top to create an overhang and provide space to position a receiving container beneath the opening.

The full stainless steel underframework includes cross bracing and round tubular legs with a Ø38.1mm outside diameter. Black plastic adjustable feet allow the table to be levelled.

Overall height is 1000mm to the top edge. The 100mm recess places the working surface at 900mm above floor level.

Standard lengths are 1200, 1500, 1800, 2000 and 2400mm, with widths of 600, 650 or 700mm. A 750mm width and other nonstandard sizes are custom and subject to quotation.

Short Form Specification

SPECIFICATION USE
Use this description when specifying this model.

Sorting Table Stainless Steel Grade 304 Heavy Duty 1.2mm Thickness 1800mm (L) x 700mm (W) x 1000mm (H) with 100mm Recess and 300mm (W) Outlet at One End.

Detailed specification

- Worktop: Stainless Steel Grade 304
- Construction: Heavy Duty
- Worktop thickness: 1.2mm
- Length: 1800mm
- Width: 700mm
- Overall height to top edge: 1000mm
- Recessed working surface height: 900mm
- Recess depth: 100mm
- Outlet width: 300mm
- Outlet position: One End
- Outlet-end legs: Inset to provide an overhang for receiving-container access
- Underframework: Full Stainless Steel
- Cross bracing: Included
- Legs: Round Tubular, Ø38.1mm Outside Diameter
- Feet: Black Plastic, Adjustable for Levelling

06 Frequently asked questions

What is this sorting table used for?

It provides a recessed work area for manually sorting, inspecting and separating food items, produce and dry goods before collection or the next production step.

How are sorted items removed from the table?

A 300mm wide opening at one end lets operators move sorted food items from the recessed surface into a crate or other receiving container below.

Why are the legs inset at the outlet end?

The legs at the outlet end are set back from the top to create an overhang and provide space to position a receiving container beneath the opening. Container access should be checked against the final table configuration.

How deep is the recess, and where is the height measured?

Overall height is 1000mm to the top edge. The 100mm recess places the working surface at 900mm above floor level.

Which standard sizes are available?

Standard lengths are 1200, 1500, 1800, 2000 and 2400mm, with widths of 600, 650 or 700mm. A 750mm width and other nonstandard sizes are custom and subject to quotation.

Can I order the table at 2000 x 750mm?

Yes. The 2000 x 750mm configuration is a custom item, available by quotation rather than as a standard website selection.

What material and framework are used?

The heavy duty worktop is 1.2mm Grade 304 stainless steel. The full stainless steel underframework includes cross bracing and round tubular legs with a Ø38.1mm outside diameter. Black plastic adjustable feet allow the table to be levelled.

Can the table be levelled?

Yes. Black plastic adjustable feet allow the table to be levelled on the installation floor.

What warranty is supplied?

This sorting-table range carries a 24-month warranty.

Product drawings and images

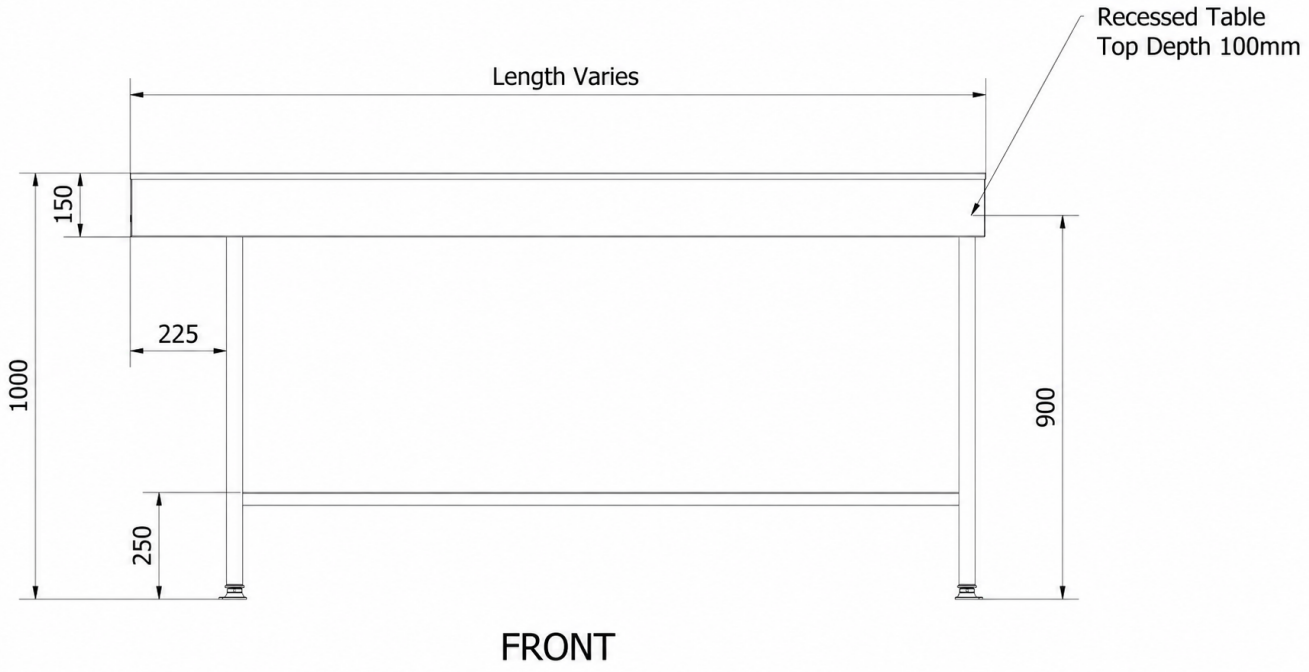

FRONT VIEW · Range front view. Length varies by configuration; overall height is 1000mm, working-surface height is 900mm and recess depth is 100mm. Fixed dimensions are in millimetres.

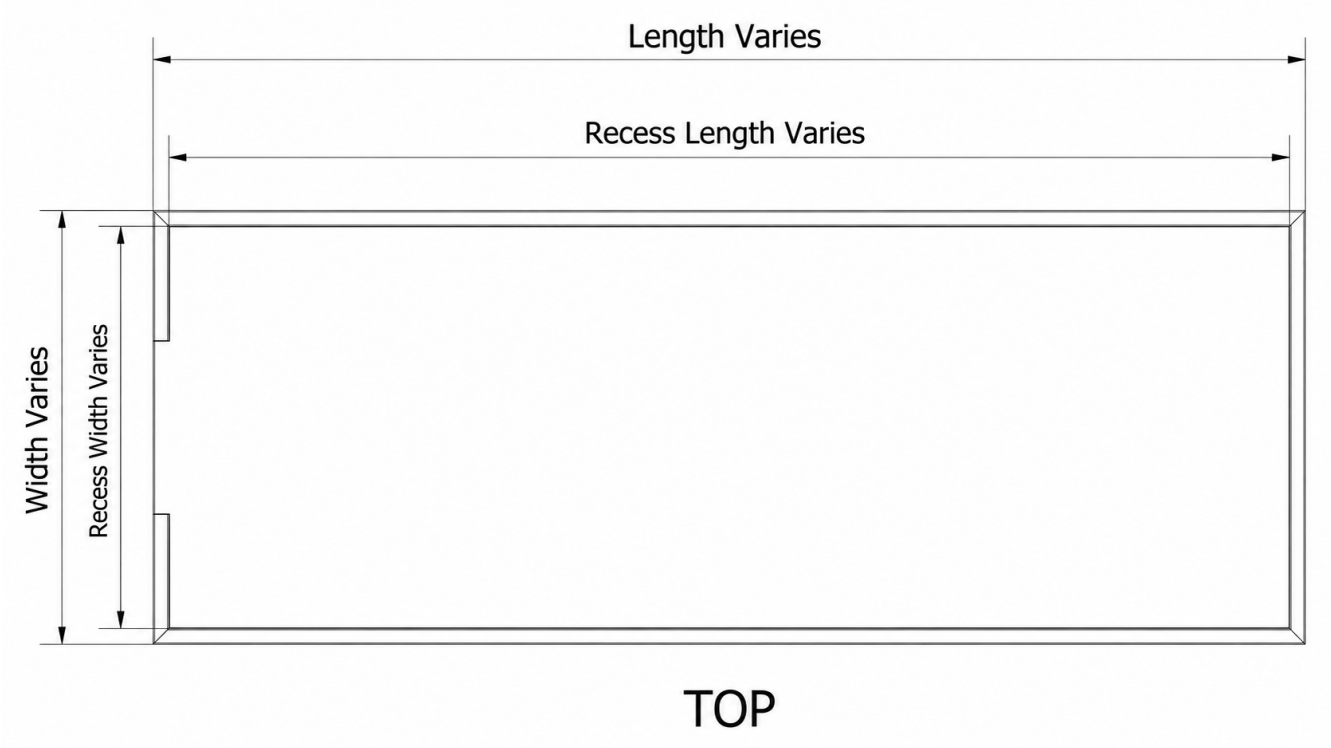

TOP VIEW · Range top view. Overall length and width, and recessed working-area length and width, vary by configuration.

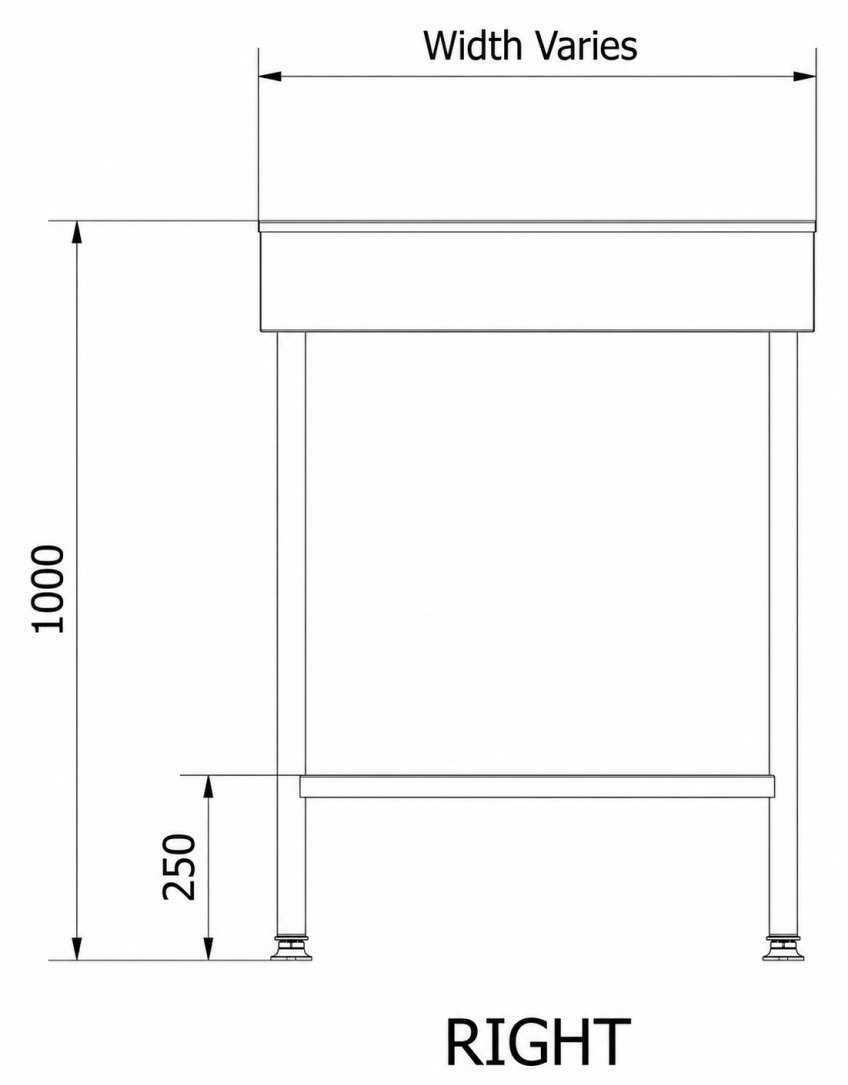

RIGHT VIEW · Range right view. Width varies by configuration; overall height is 1000mm. Fixed dimensions are in millimetres.

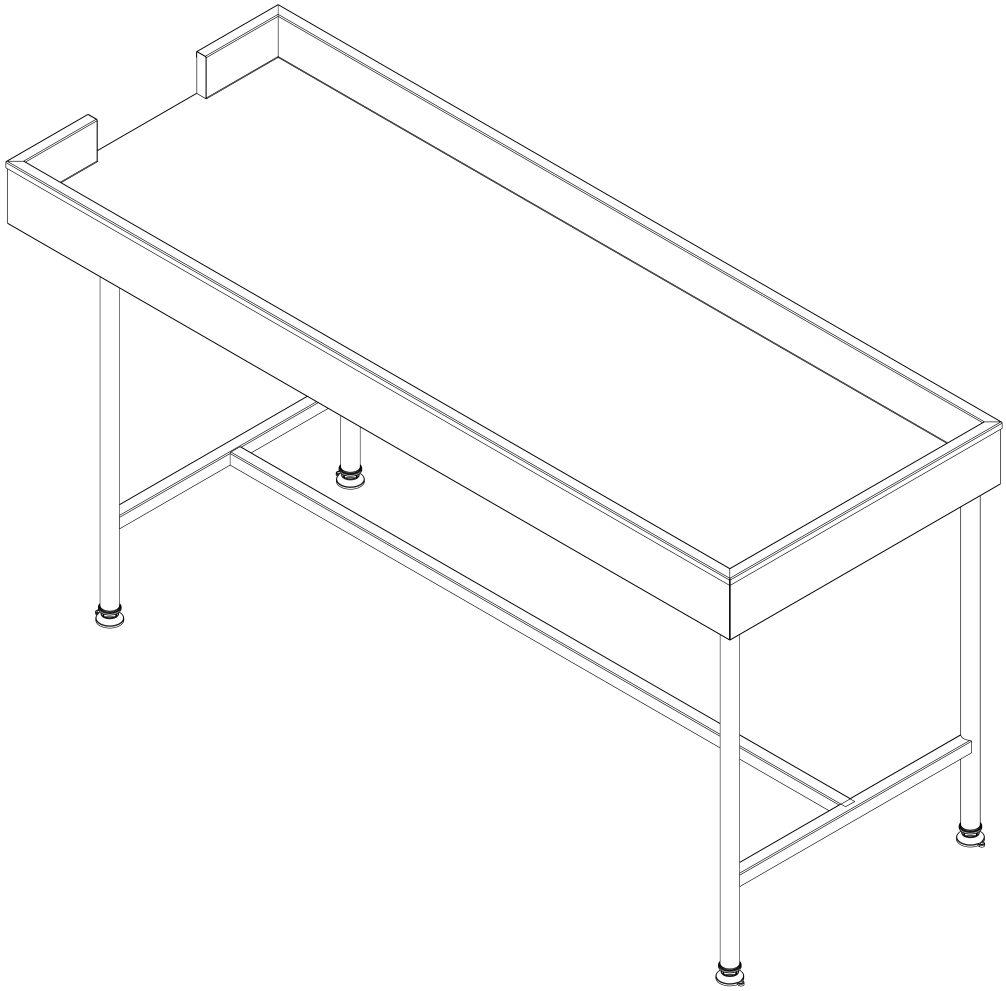

TOP RIGHT

ISOMETRIC VIEW · Representative isometric view of the recessed sorting table and stainless steel underframework. Length and width vary by configuration.

E&OE. Specifications are subject to change without notice.