MODEL SPECIFICATION

B34676(112-1200RL) – Wash Trough Shrouded 1200mm Right-Hand Outlet

DOCUMENT SCOPE	DOCUMENT REFERENCE	GENERATED ON
Model	B34676(112-1200RL){PSS}	26 Nov 2026

01 Model specification

Wash Trough Neutral-Type Stainless Steel Grade 304 1.2mm Thick, 1200mm Length, with Wall Mounting, Shroud, Tap Landing and Right-Hand Waste Outlet, with Front Support Legs. Tapware, Knee-Operated Controls and Pre-Punched Tap Holes Excluded

02 Technical specifications

PARAMETER	VALUE	UNIT	TECHNICAL NOTE
Length	1200	mm	The length of the item typically as measured from left to right.
Waste Outlet Orientation	Right Hand	–	–
Front Support Legs	Yes	–	–
Material	Stainless Steel Grade 304	–	The primary material used in the construction of the item. Certain components may be manufactured from different materials.
Material Thickness	1.2	mm	The thickness of the material used for the item's primary construction. The thickness of individual components may vary.
Tap Hole Provision	Not punched as standard	–	Tap holes are not punched as standard. Confirm the required tap or spout layout for the installation.

03 Dimensions and mass

PARAMETER	VALUE	UNIT
Length	1200	mm

04 Model and supply data

Parent product	B34676 — Shrouded Wash Trough with Tap Landing
Typical lead time	10–15 working days
Warranty	12 months

121 Koornhof Road, Meadowdale, Germiston, South Africa, 1614 · hello@basterfield.co.za · basterfield.co.za · +27 87 095 5357

05 Specification notes

Configuration description	Wall-mounted shrouded wash trough for personnel handwashing in food hygiene environments. The tap landing accommodates pillar taps, or specify a bib-tap installation above the trough. Tapware and pre-punched tap holes are excluded as standard. Optional sensor taps provide hands-free operation; B34655 offers knee operation. Front support legs supplement wall mounting. As a guide, we recommend 1200mm for 2 taps, 1800mm for 3 taps and 2400mm for 4 taps. The number of taps can vary for the same trough length according to the tap-hole arrangement. Specify the required number, positions and diameter of tap holes for the selected tapware.
Short Form Specification	**SPECIFICATION USE** Use this description when specifying this model. Wash Trough Neutral-Type Stainless Steel Grade 304 1.2mm Thick, 1200mm Length, with Wall Mounting, Shroud, Tap Landing and Right-Hand Waste Outlet, with Front Support Legs. Tapware, Knee-Operated Controls and Pre-Punched Tap Holes Excluded.
Detailed specification	Length: 1200mm Waste Outlet Orientation: Right Hand Front Support Legs: Yes Material: Stainless Steel Grade 304 Material Thickness: 1.2mm Tap Hole Provision: Not punched as standard Tapware: Supplied Separately Knee-Operated Controls: Not Included

06 Frequently asked questions

Are taps and pre-punched tap holes included?

No. Tapware and pre-punched tap holes are excluded as standard. Specify the selected tapware, mounting position and hole diameter when arranging the installation.

Which taps can be used with this trough?

The tap landing accommodates deck-mounted pillar taps. A bib-tap arrangement can also be used above the trough. Confirm the mounting position and spout reach for the selected tapware.

How should I choose the length for my tap arrangement?

As a guide, we recommend 1200mm for 2 taps, 1800mm for 3 taps and 2400mm for 4 taps. The number of taps can vary for the same trough length according to the tap-hole arrangement. Specify the required number, positions and diameter of tap holes for the selected tapware.

What stainless steel grade and thickness are used?

All models use Grade 304 stainless steel. The 1200mm and 1800mm models are 1.2mm thick; the 2400mm model is 1.5mm thick.

Is the B34676 hands-free or knee-operated?

The standard trough is supplied without tapware or knee-operated controls. Select optional sensor taps when hands-free operation is required, or consider the B34655 range for knee-operated water control.

How many optional Cobra sensor taps should I select?

As a guide, we recommend 1200mm for 2 taps, 1800mm for 3 taps and 2400mm for 4 taps. The number of taps can vary for the same trough length according to the tap-hole arrangement. Specify the required number, positions and diameter of tap holes for the selected tapware. These taps are separate optional extras. Confirm a suitable cold or pre-blended water supply.

Can I choose the waste outlet side and front support legs?

Yes. Every length is available with a left-hand or right-hand waste outlet, with or without front support legs. The legs supplement wall mounting. In the model code, L or R identifies the outlet; an additional trailing L identifies the leg-equipped configuration.

Is it suitable for food hygiene environments?

The Grade 304 stainless steel trough is intended for personnel handwashing in food hygiene environments. Choose the tap controls to suit the site: optional sensor taps provide hands-free operation, while B34655 offers knee operation.

What does the product image show?

The image shows the 1200mm right-hand model without front support legs. Tap holes are illustrated; pre-punched tap holes are not included as standard. Length, outlet side and support legs depend on the selected configuration.

Product drawings and images



ISOMETRIC VIEW · 1200mm right-hand model shown without support legs. Tap holes are illustrated; pre-punched tap holes are not included as standard. Configurations vary.

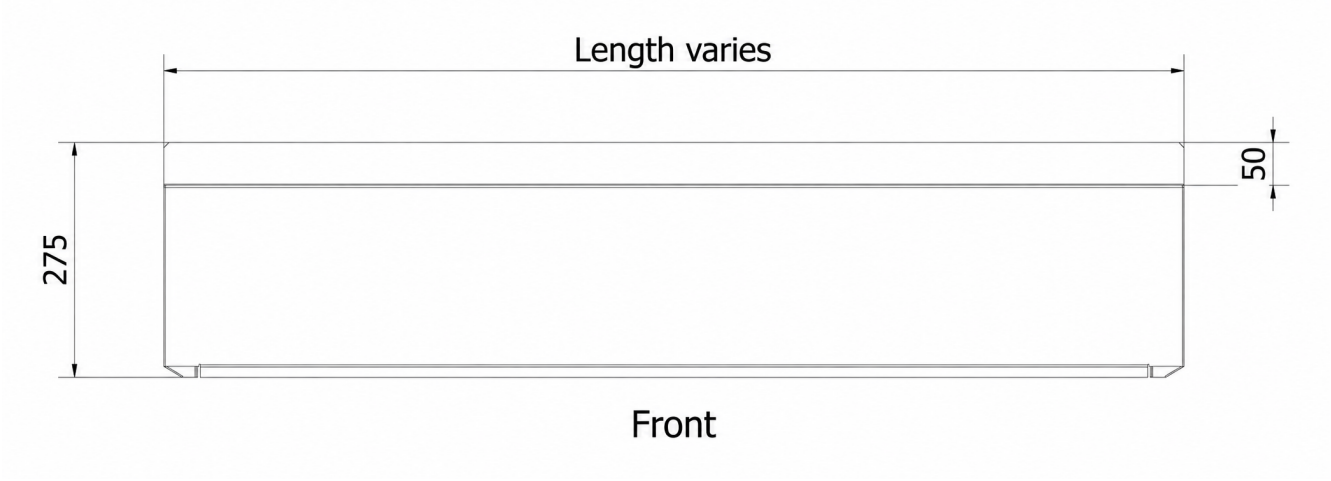

FRONT VIEW · Range front view: length varies by model. Dimensions in mm. Trough shown without optional front support legs.

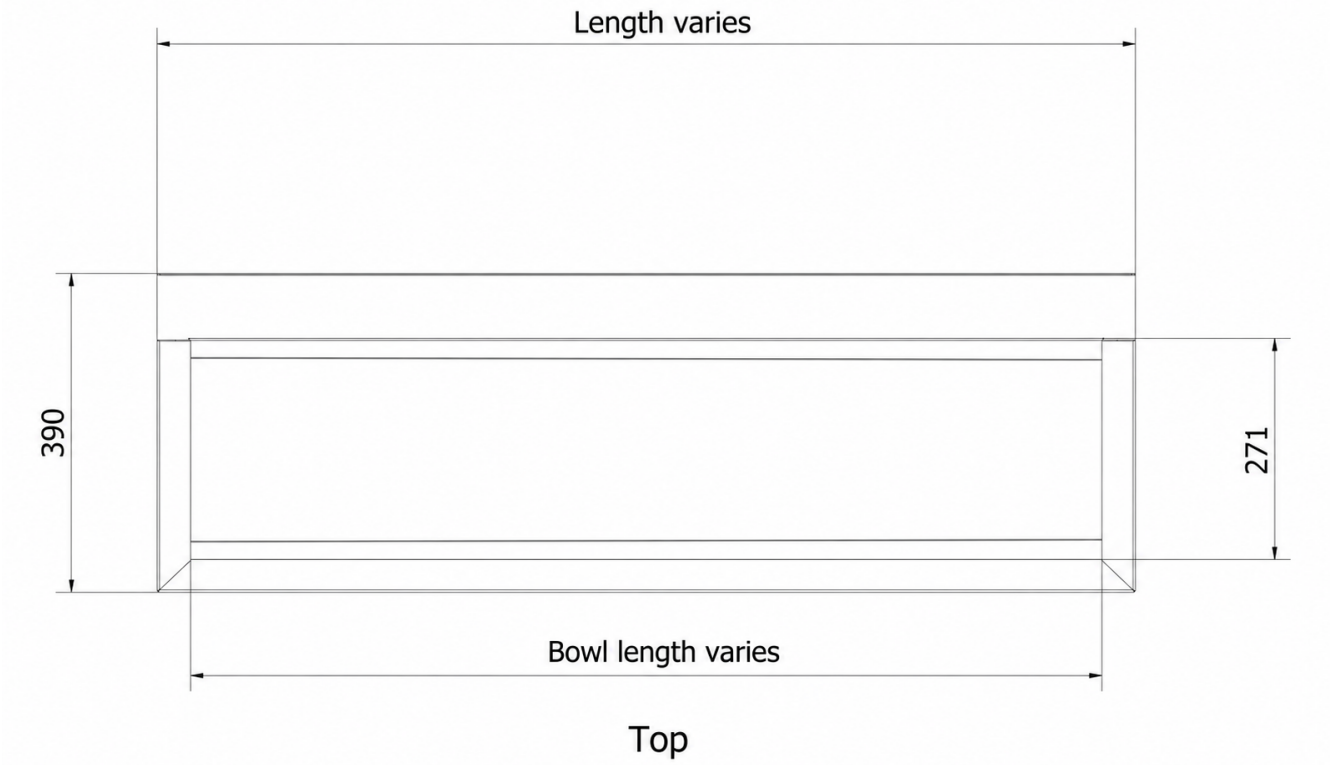

TOP VIEW · Range top view: overall length and bowl length vary by model. Dimensions in mm. Outlet arrangement follows the selected model.

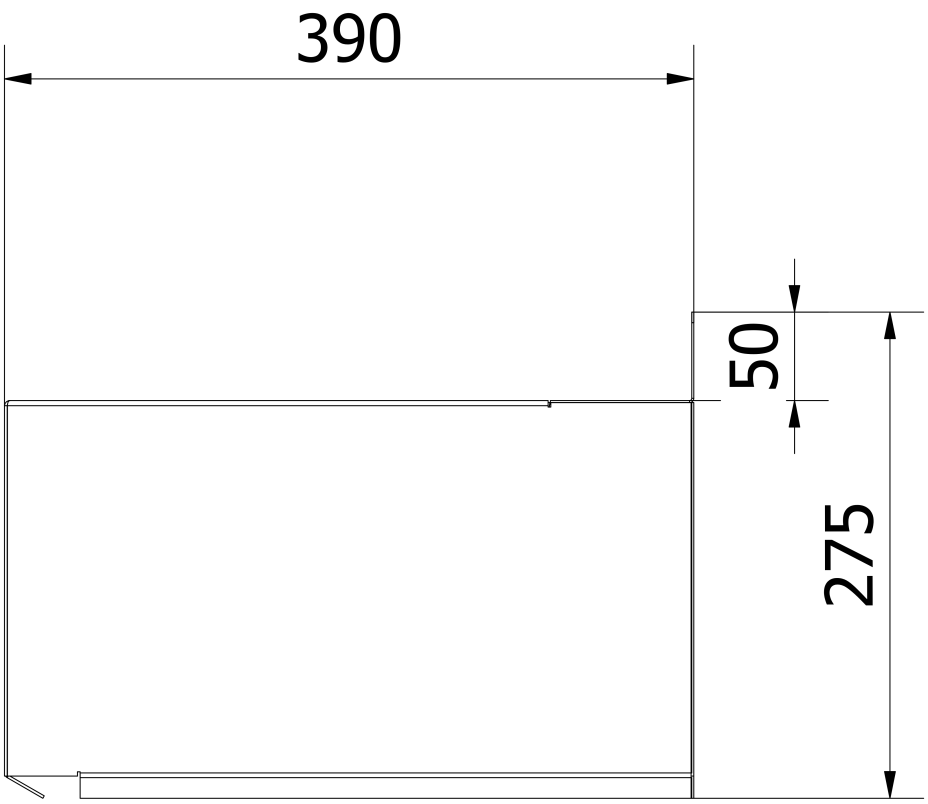

Right

RIGHT VIEW · Typical range right-side view; dimensions in mm. Front support legs are optional.

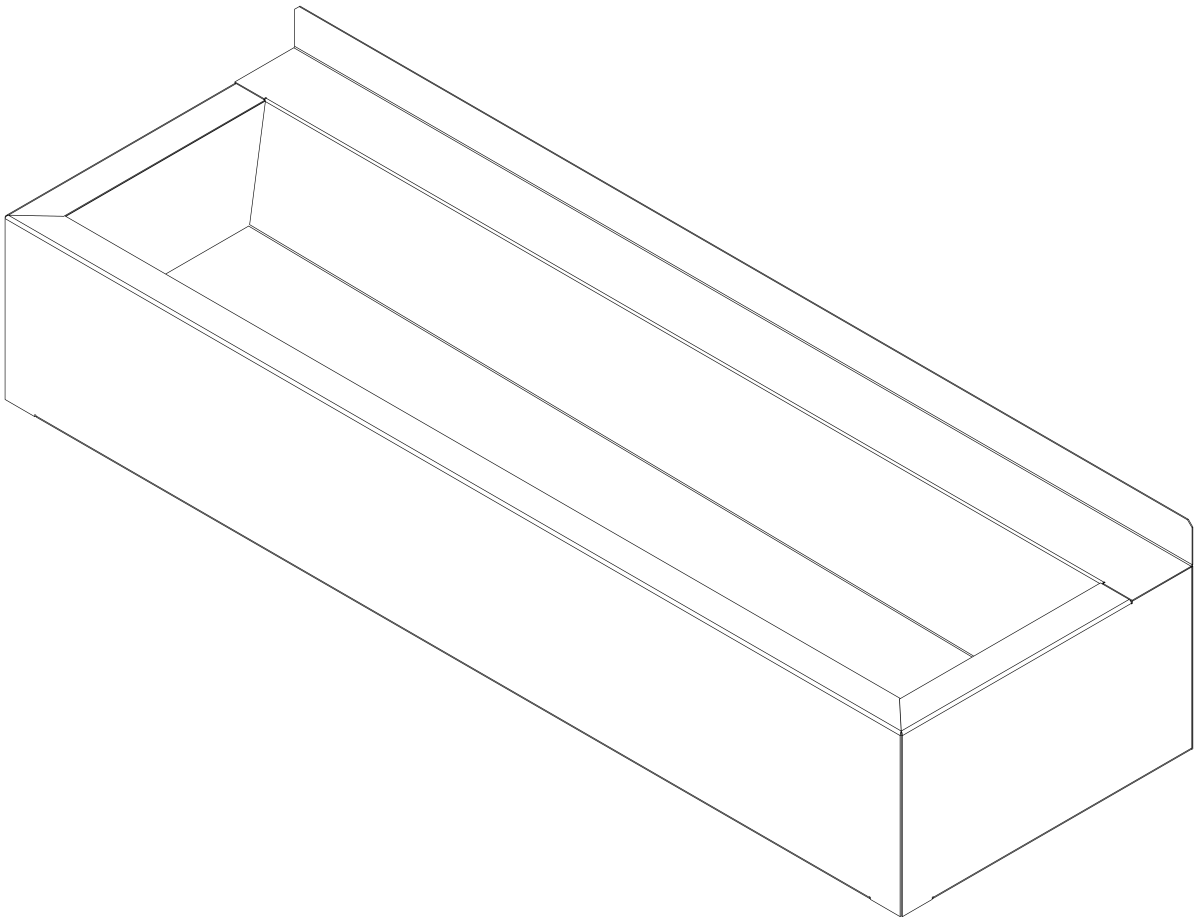

Top Right

ISOMETRIC VIEW · Typical range isometric view, shown without front support legs. Length and outlet side depend on the selected model. Pre-punched tap holes are excluded as standard.

E&OE. Specifications are subject to change without notice.

121 Koornhof Road, Meadowdale, Germiston, South Africa, 1614 · hello@basterfield.co.za · basterfield.co.za · +27 87 095 5357