MODEL SPECIFICATION

B38220(S2-112-1000-CZD) – Step Over Bench SS304 1000 mm 2-Tier CZD

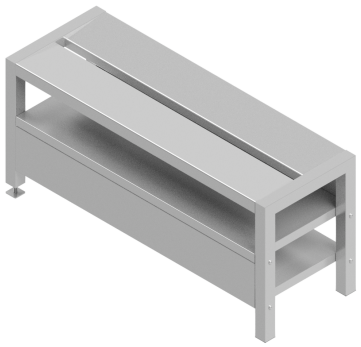

PRODUCT IMAGE

DOCUMENT SCOPE	DOCUMENT REFERENCE	GENERATED ON
Model	B38220(S2-112-1000-CZD){PSS}	29 Nov 2026

01 Model specification

Step Over Bench in Grade 304 Stainless Steel, 1000 mm Long, with a Two-Tier Shoe Shelf and Clean Zone Dividers; 350 mm Wide and 450 mm High.

02 Technical specifications

PARAMETER	VALUE	UNIT	TECHNICAL NOTE
Length	1000	mm	The length of the item typically as measured from left to right.
Material	Stainless Steel Grade 304	–	The primary material used in the construction of the item. Certain components may be manufactured from different materials.
Shoe Shelf Tiers	2	–	–
Adjustable Feet	Yes	–	–
Width	350	mm	The width of the item typically as measured from front to back.
Height	450	mm	Overall vertical envelope, including the splashback where fitted. For tables and sinks, this is distinct from working height.
Bench Type	Step-over	–	–
Material Thickness	1.2	mm	The thickness of the material used for the item's primary construction. The thickness of individual components may vary.

03 Dimensions and mass

PARAMETER	VALUE	UNIT
Length	1000	mm
Width	350	mm
Overall height	450	mm

04 Model and supply data

Parent product	B38220(CZD) — Step Over Bench Stainless Steel Grade 304 with Clean Zone Dividers
Typical lead time	10–15 working days
Warranty	12 months

05 Specification notes

Configuration description

Step over bench in Grade 304 stainless steel, 1000 mm long, with a two-tier shoe shelf and clean zone dividers; 350 mm wide and 450 mm high. Fully welded frame with square adjustable feet and half-height dust covers on each side.

Short Form Specification

> **SPECIFICATION USE**
> Use this description when specifying this model.

Basterfield B38220(S2-112-1000-CZD). Step over bench in Grade 304 stainless steel, 1000 mm long, with a two-tier shoe shelf and clean zone dividers; 350 mm wide and 450 mm high. Fully welded frame with square adjustable feet and half-height dust covers on each side.

Detailed specification

- Model: B38220(S2-112-1000-CZD)
- Material: Stainless Steel Grade 304
- Length: 1000 mm
- Shoe shelf tiers: 2
- Feet: Square adjustable feet
- Clean zone dividers: Half-height dust covers on each side
- Width: 350 mm
- Height: 450 mm

06 Frequently asked questions

Which lengths are available?

Standard lengths are 1000, 1500 and 2000 mm. Custom lengths are available upon request.

What shoe storage and dividers are included?

Each standard bench has a double shoe shelf, with two storage tiers, and half-height dust covers on each side.

What material and feet are used?

The benches are manufactured from Grade 304 stainless steel and have square adjustable feet.

Which model do the dimensioned drawings show?

The front and top drawings show the 1000 mm model, measuring 1000 mm long, 350 mm wide and 450 mm high.

Product drawings and images

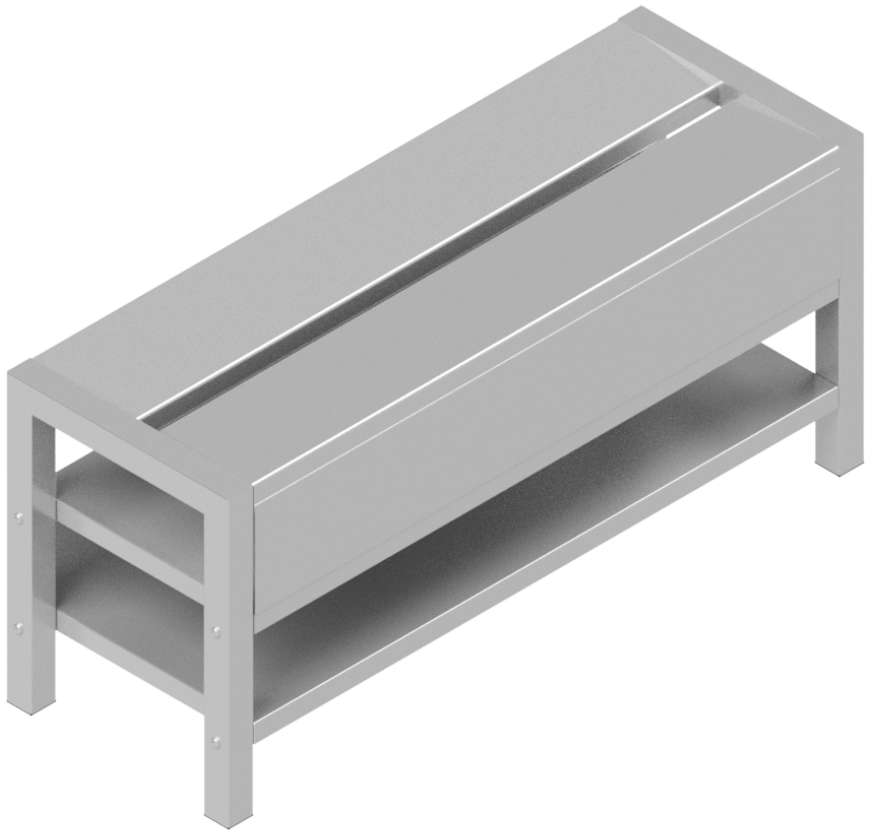

PRODUCT IMAGE

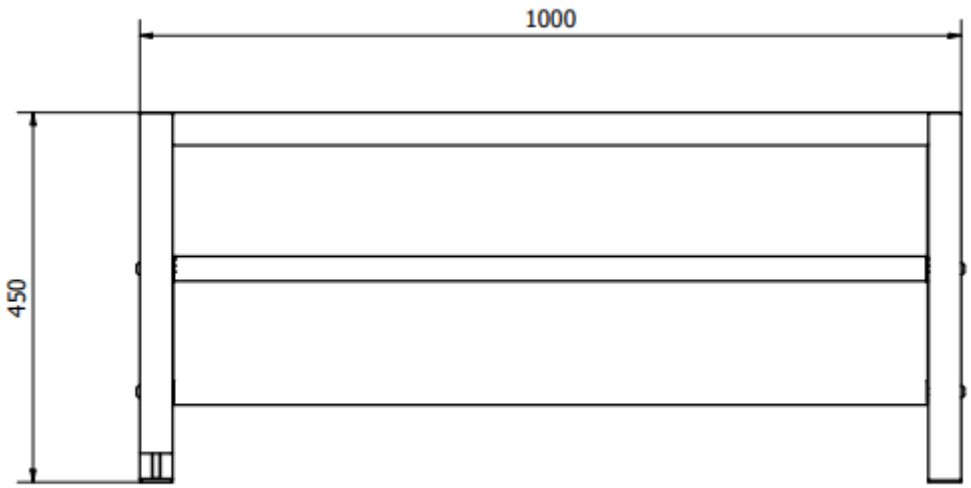

FRONT (1 : 6)

FRONT VIEW

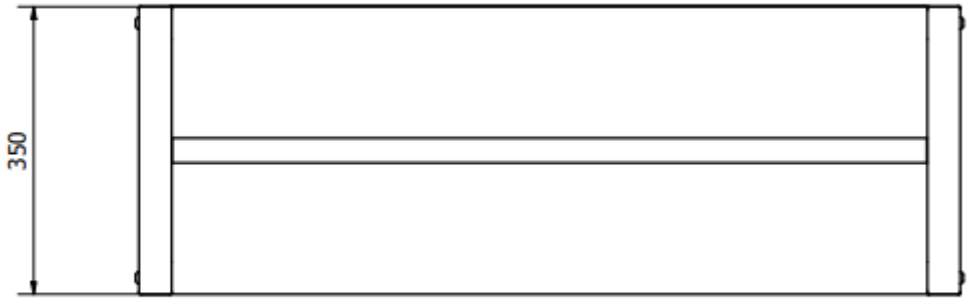

TOP (1 : 6)

TOP VIEW

E&OE. Specifications are subject to change without notice.