MODEL SPECIFICATION

B38220(S2-112-1000-SZD) – Step Over Bench SS304 1000 mm 2-Tier SZD

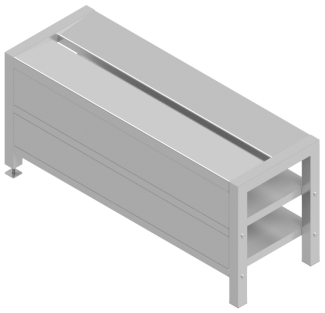

PRODUCT IMAGE

DOCUMENT SCOPE	DOCUMENT REFERENCE	GENERATED ON
Model	B38220(S2-112-1000-SZD){PSS}	28 Nov 2026

01 Model specification

Step Over Bench in Grade 304 Stainless Steel, 1000 mm Long, with a Two-Tier Shoe Shelf and Single-Side Clean Zone Dividers; 350 mm Wide and 450 mm High.

02 Technical specifications

PARAMETER	VALUE	UNIT	TECHNICAL NOTE
Length	1000	mm	The length of the item typically as measured from left to right.
Shoe Shelf Tiers	2	–	–
Material	Stainless Steel Grade 304	–	The primary material used in the construction of the item. Certain components may be manufactured from different materials.
Width	350	mm	The width of the item typically as measured from front to back.
Height	450	mm	Overall vertical envelope, including the splashback where fitted. For tables and sinks, this is distinct from working height.
Material Thickness	1.2	mm	The thickness of the material used for the item's primary construction. The thickness of individual components may vary.

03 Dimensions and mass

PARAMETER	VALUE	UNIT
Length	1000	mm
Width	350	mm
Overall height	450	mm

04 Model and supply data

Parent product	B38220(SZD) — Step Over Bench Stainless Steel Grade 304 with Single-Side Clean Zone Dividers
Typical lead time	10–15 working days
Warranty	12 months

05 Specification notes

Configuration description

Step over bench in Grade 304 stainless steel, 1000 mm long, with a two-tier shoe shelf and single-side clean zone dividers; 350 mm wide and 450 mm high. Fully welded frame with adjustable stainless steel levelling feet. Shoe shelf accessible from the clean side.

Short Form Specification

> **SPECIFICATION USE**
> Use this description when specifying this model.

Basterfield B38220(S2-112-1000-SZD). Step over bench in Grade 304 stainless steel, 1000 mm long, with a two-tier shoe shelf and single-side clean zone dividers; 350 mm wide and 450 mm high. Fully welded frame with adjustable stainless steel levelling feet. Shoe shelf accessible from the clean side.

Detailed specification

- Model: B38220(S2-112-1000-SZD)
- Material: Stainless Steel Grade 304
- Length: 1000 mm
- Width: 350 mm
- Height: 450 mm
- Boot shelf tiers: 2
- Single side clean zone dividers
- Fully welded frame
- Adjustable stainless steel levelling feet
- Shelf access: clean side

Product drawings and images

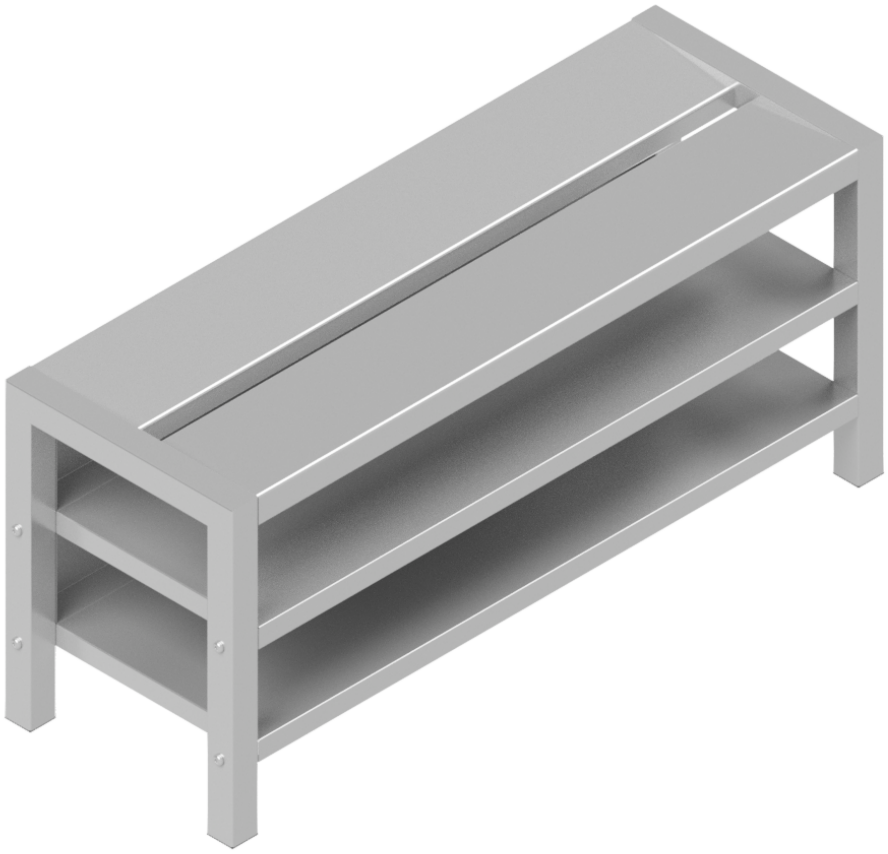

PRODUCT IMAGE

E&OE. Specifications are subject to change without notice.