MODEL SPECIFICATION

E25160(112-1200x0700) – Preparation Table Recessed 1200mm (L) x 700mm (W)

DOCUMENT SCOPE	DOCUMENT REFERENCE	GENERATED ON
Model	E25160(112-1200x0700){PSS}	24 Nov 2026

01 Model specification

Recessed Top Preparation Table Stainless Steel Grade 304 Heavy Duty 1.2mm Thickness 1200mm (L) x 700mm (W) x 900mm (H) with 30mm Recess, Marine Edge, Stainless Steel Framework and Adjustable Feet

The 900mm overall height is measured to the top of the marine edge; the recessed work surface is 870mm high. Supplied with full stainless steel underframework, cross bracing, Ø38.1mm tubular legs and black plastic adjustable feet for levelling. The top has no fall or drainage outlet.

02 Technical specifications

PARAMETER	VALUE	UNIT	TECHNICAL NOTE
Working Height	870	mm	Height of the recessed working surface: 900mm overall height less the 30mm recess.
Overall height	900	mm	Overall height measured to the top of the marine edge.
Length	1200	mm	The length of the item typically as measured from left to right.
Width	700	mm	The width of the item typically as measured from front to back.
Material	Stainless Steel Grade 304	–	The worktop is Grade 304 stainless steel.
Material Thickness	1.2	mm	Thickness of the stainless steel worktop.
Product Range	Heavy Duty	–	–
Recessed Slab Depth	30	mm	Vertical depth from the top of the marine edge to the recessed working surface.
Slab Edge	Marine Edge	–	Marine edge surrounding the recessed working surface.
Framework Material	Stainless Steel	–	Full stainless steel underframework.
Cross Bracing	Yes	–	The stainless steel underframework includes cross bracing.

02 Technical specifications

PARAMETER	VALUE	UNIT	TECHNICAL NOTE
Leg Profile	Round Tubular	—	Round tubular stainless steel legs.
Leg Diameter	38.1	mm	Outside diameter of the tubular stainless steel legs.
Feet Material	Black Plastic	—	Black plastic adjustable feet for levelling.
Adjustable Feet	Yes	—	Adjustable feet allow the table to be levelled.
Drainage	No Fall or Drainage Outlet	—	The top has no fall and no drainage outlet. Liquids must be removed separately.

03 Dimensions and mass

PARAMETER	VALUE	UNIT
Length	1200	mm
Width	700	mm
Overall height	900	mm

04 Model and supply data

Parent product	E25160(112) — Heavy Duty Marine Edge Recessed Preparation Table
Typical lead time	10–15 working days
Warranty	24 months

05 Specification notes

Configuration description

This heavy duty recessed top preparation table measures 1200mm long x 700mm wide x 900mm overall height to the marine edge. This heavy duty recessed top preparation table provides a contained work area for dry goods sorting and food preparation. The Grade 304 stainless steel top is 1.2mm thick and has a 30mm recess with a marine edge.

The full stainless steel underframework includes cross bracing and round tubular legs with a Ø38.1mm outside diameter. Black plastic adjustable feet provide levelling. Overall height is 900mm to the top of the marine edge, with the recessed working surface at 870mm.

The top has no fall or drainage outlet. Wet food-production applications require liquids to be removed separately.

Choose standard lengths of 1200, 1500, 1800, 2000 or 2400mm and widths of 600, 650 or 700mm. A 750mm width is custom; the initial custom configuration is 2000mm long x 750mm wide.

Short Form Specification

SPECIFICATION USE
Use this description when specifying this model.

Recessed Top Preparation Table Stainless Steel Grade 304 Heavy Duty 1.2mm Thickness 1200mm (L) x 700mm (W) x 900mm (H) with 30mm Recess, Marine Edge, Stainless Steel Framework and Adjustable Feet

Detailed specification

- Worktop: Stainless Steel Grade 304
- Construction: Heavy Duty
- Worktop thickness: 1.2mm
- Length: 1200mm
- Width: 700mm
- Overall height to top of marine edge: 900mm
- Recessed working surface height: 870mm
- Recess depth: 30mm
- Edge: Marine Edge
- Underframework: Full Stainless Steel
- Cross bracing: Included
- Legs: Round Tubular, Ø38.1mm Outside Diameter
- Feet: Black Plastic, Adjustable for Levelling
- Fall: None
- Drainage outlet: None

06 Frequently asked questions

What is the difference between this table and the E25145 flat table?

E25160 has a top recessed by 30mm with a marine edge. Its construction includes a 1.2mm Grade 304 stainless steel worktop, full stainless steel underframework, cross bracing, Ø38.1mm tubular legs and black plastic adjustable feet. The recess sides slope down at 60° to the horizontal, as shown by the marine-edge profile.

Can it be used for wet food-production applications?

It may be used where the process allows liquids to be removed separately. The top has no fall and no drainage outlet, so it does not drain automatically.

Where is the 900mm height measured?

The 900mm overall height is measured to the top of the marine edge. The recessed work surface is 870mm above floor level.

Which standard sizes are available?

Standard lengths are 1200, 1500, 1800, 2000 and 2400mm, each with a choice of 600, 650 or 700mm width. Overall height is 900mm.

Is a 750mm width available?

Yes. A 750mm width is custom rather than a standard configurator option. The initial custom item measures 2000mm (L) x 750mm (W) x 900mm (H).

What are the feet and support frame made from?

The underframework and tubular legs are stainless steel. The adjustable levelling feet are black plastic, and the frame includes cross bracing.

Product drawings and images

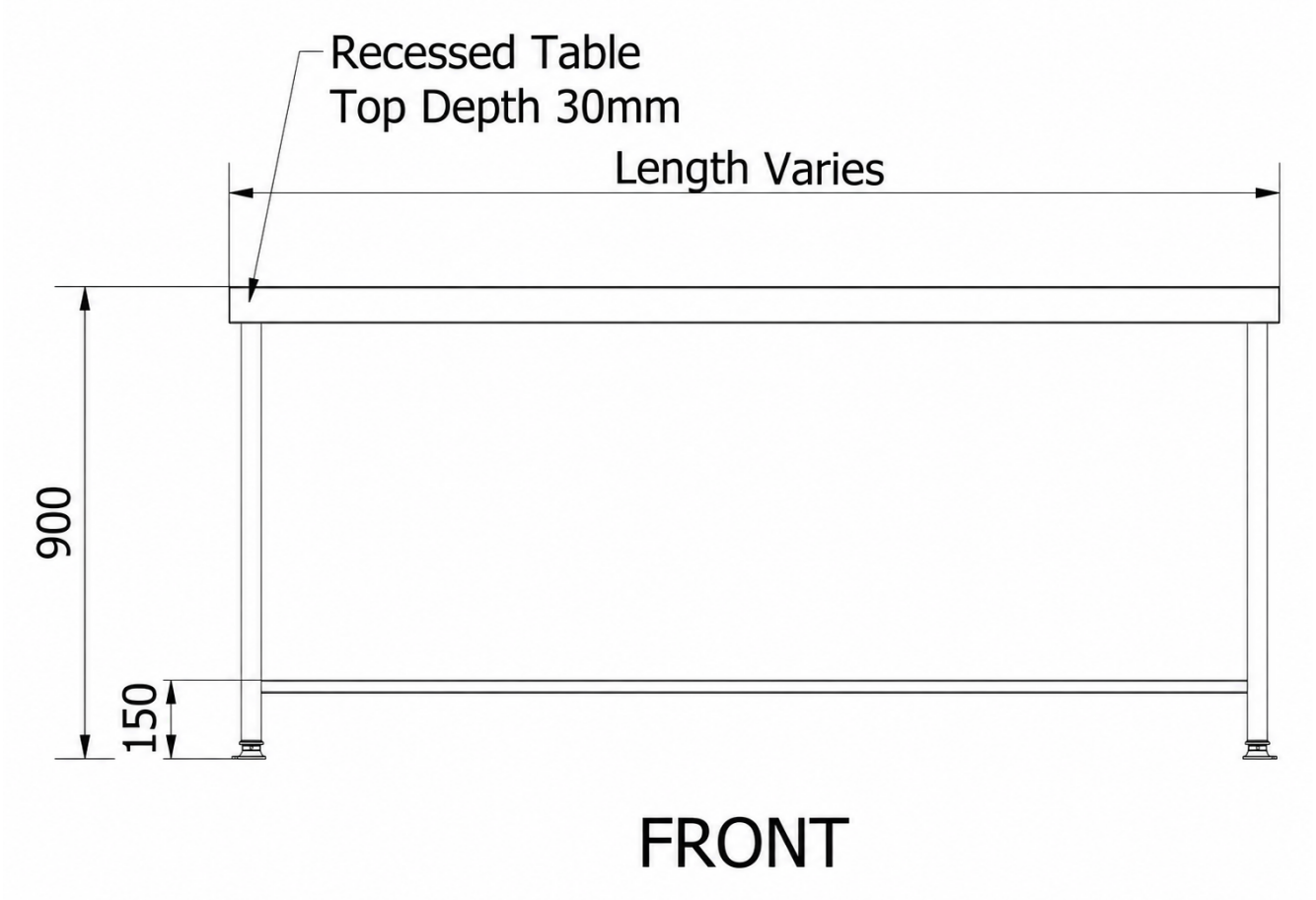

FRONT VIEW · Range front view. Length varies by configuration. Fixed dimensions are in millimetres.

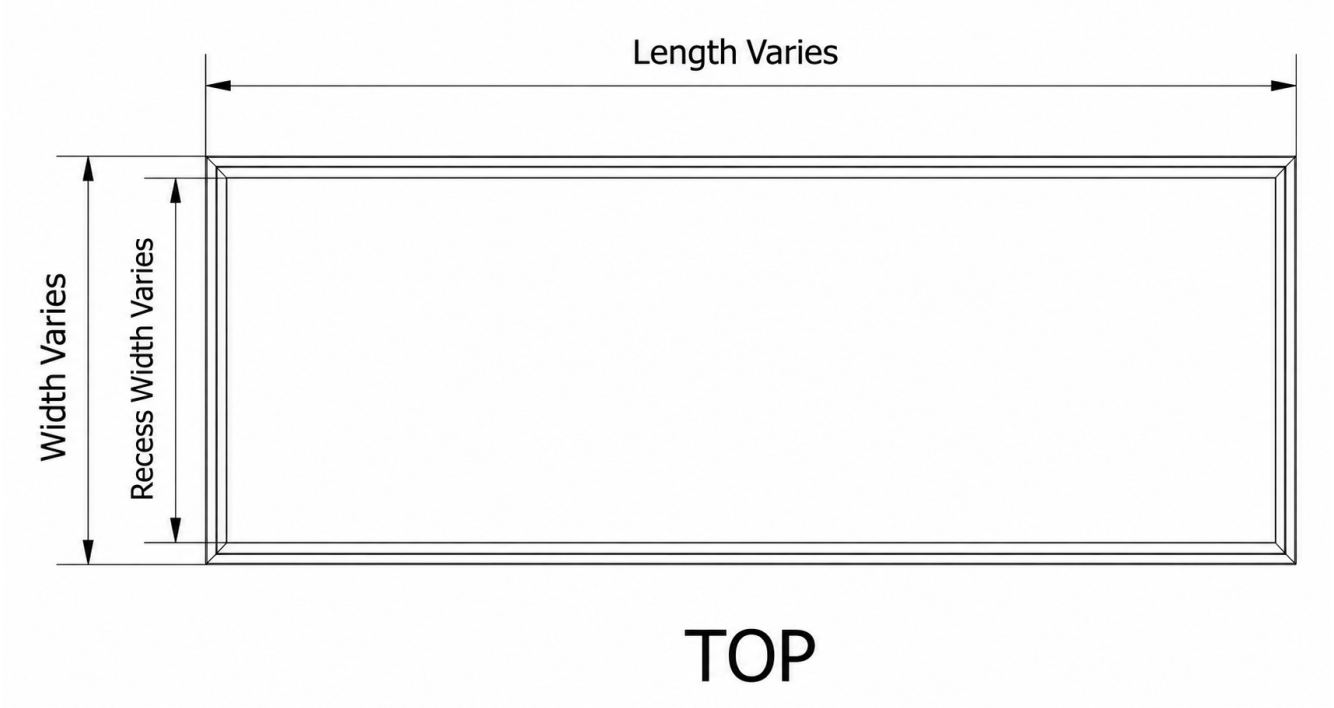

TOP VIEW · Range top view. Length, overall width and recess width vary by configuration.

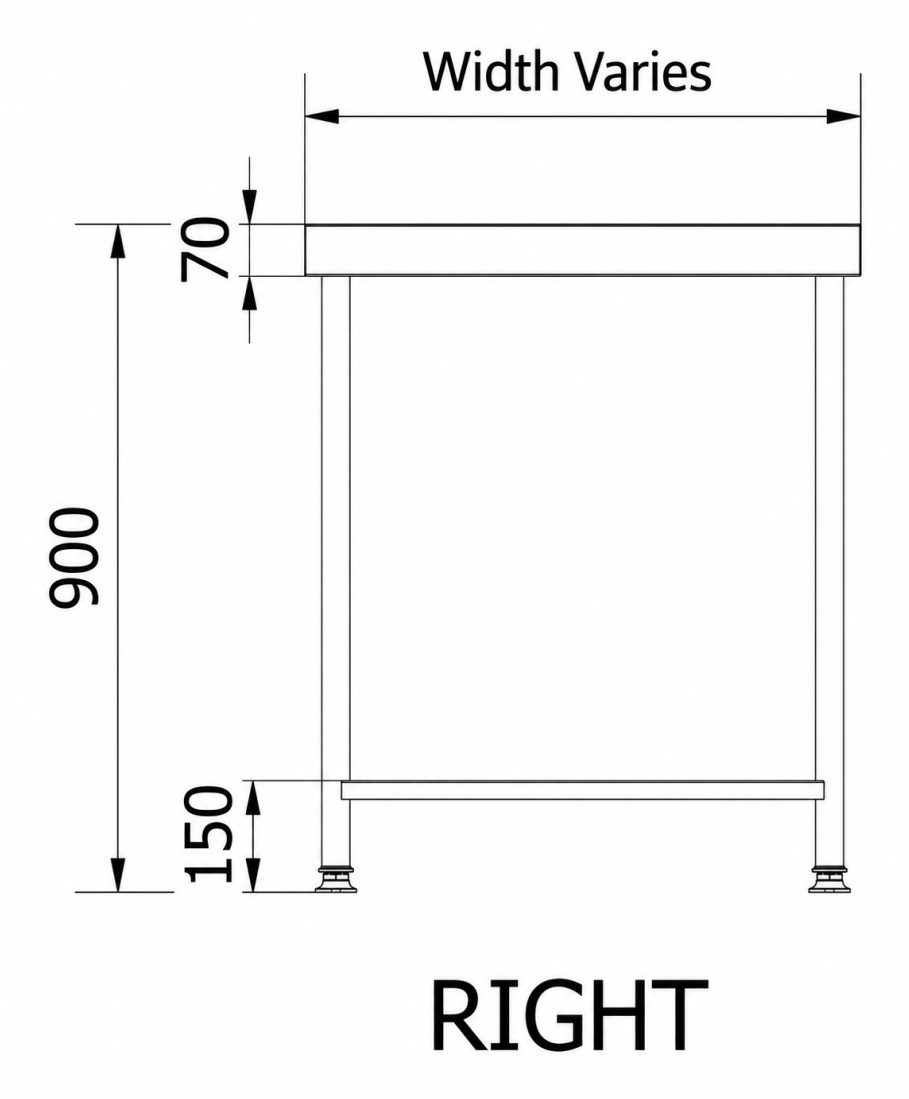

RIGHT VIEW · Range right view. Width varies by configuration. Fixed dimensions are in millimetres.

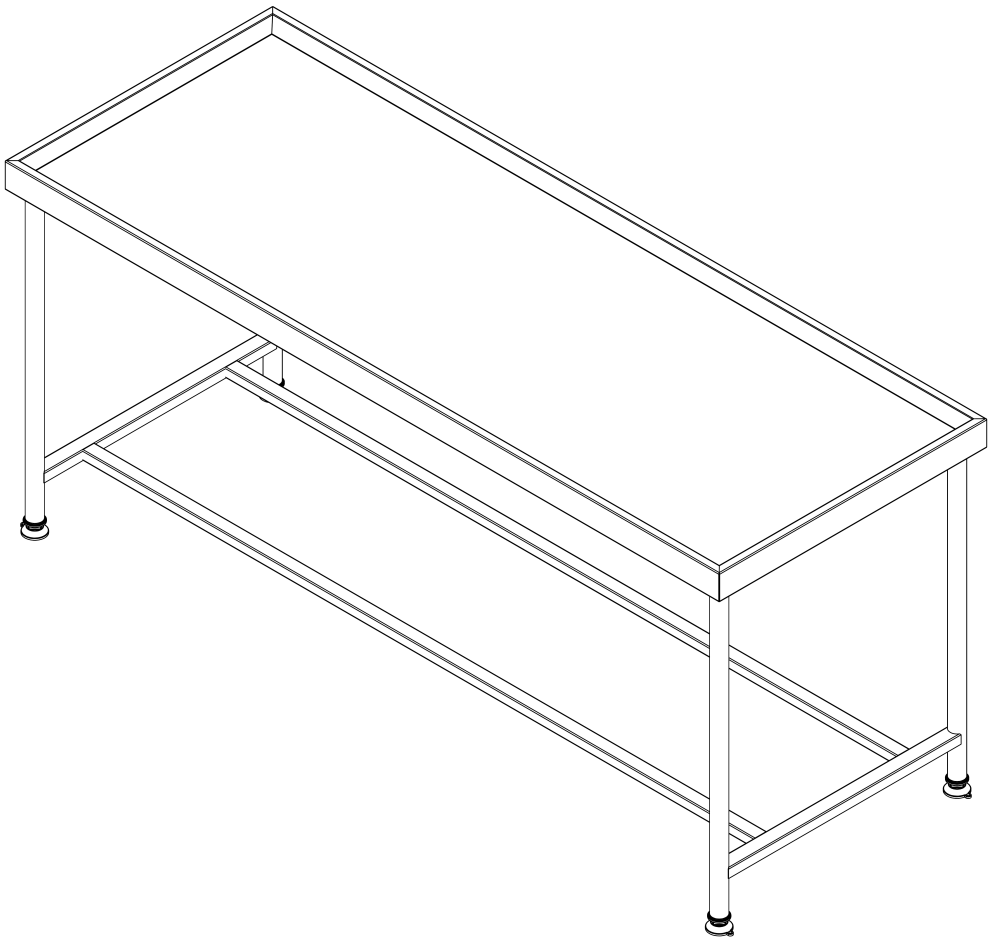

TOP RIGHT

ISOMETRIC VIEW · Representative marine-edge recessed preparation table. Length and width vary by configuration.

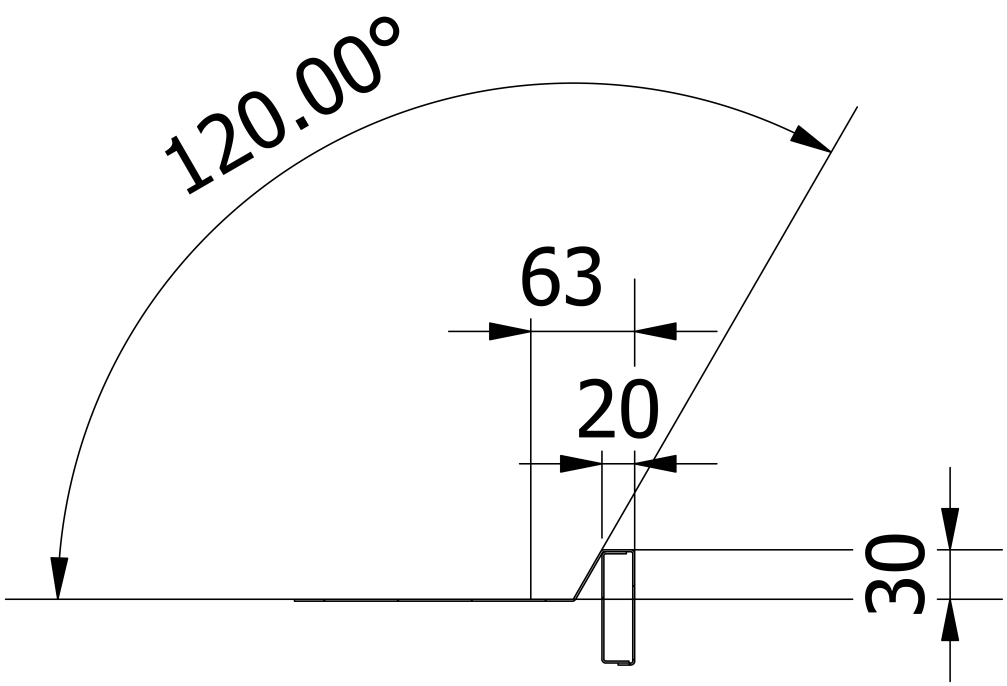

Edge Profile

DETAIL VIEW · Marine-edge profile detail. Fixed profile dimensions are in millimetres.

E&OE. Specifications are subject to change without notice.