MODEL SPECIFICATION

E25161(112-2000x0600) – Preparation Table Recessed 2000mm (L) x 600mm (W)

DOCUMENT SCOPE	DOCUMENT REFERENCE	DATA STATUS	GENERATED ON
Model	E25161(112-2000x0600){PSS}	Published catalogue data	15 Oct 2026

01 Model specification

Preparation Table Stainless Steel Grade 304 Heavy Duty 1.2mm Thickness 2000mm (L) x 600mm (W) x 900mm (H) with 30mm Recess, 90° Vertical Sides, Stainless Steel Framework and Adjustable Feet.

Overall height is 900mm to the top of the raised perimeter edge, placing the level recessed working surface at 870mm. The full stainless steel underframework includes cross bracing and round tubular legs with a Ø38.1mm outside diameter. Black plastic adjustable feet allow levelling. The top has no fall or drainage outlet.

02 Technical specifications

PARAMETER	VALUE	UNIT	TECHNICAL NOTE
Working Height	870	mm	Height of the level recessed working surface.
Overall height	900	mm	Overall height measured to the top of the raised perimeter edge.
Length	2000	mm	The length of the item typically as measured from left to right.
Width	600	mm	The width of the item typically as measured from front to back.
Material	Stainless Steel Grade 304	–	The worktop is Grade 304 stainless steel.
Material Thickness	1.2	mm	Thickness of the stainless steel worktop.
Product Range	Heavy Duty	–	Heavy duty construction.
Recessed Slab Depth	30	mm	Vertical depth from the perimeter edge to the level working surface.
Slab Edge	90° Vertical Sides	–	Vertical sides at 90° to the horizontal surround the recessed working surface.
Framework Material	Stainless Steel	–	Full stainless steel underframework.
Cross Bracing	Yes	–	The stainless steel underframework includes cross bracing.

121 Koornhof Road, Meadowdale, Germiston, South Africa, 1614 · hello@basterfield.co.za · basterfield.co.za · +27 87 095 5357

02 Technical specifications

PARAMETER	VALUE	UNIT	TECHNICAL NOTE
Leg Profile	Round Tubular	–	Round tubular stainless steel legs.
Leg Diameter	38.1	mm	Outside diameter of the tubular stainless steel legs.
Feet Material	Black Plastic	–	Black plastic adjustable feet for levelling.
Adjustable Feet	Yes	–	Adjustable feet allow the table to be levelled.
Drainage	No Fall or Drainage Outlet	–	The level working surface has no fall or drainage outlet.

03 Dimensions and mass

PARAMETER	VALUE	UNIT
Length	2000	mm
Width	600	mm
Overall height	900	mm

04 Model and supply data

Parent product	E25161(112) – Heavy Duty Recessed Preparation Table with 90° Vertical Sides
Typical lead time	10–15 working days
Warranty	24 months

05 Specification notes

Configuration description

This table measures 2000mm long x 600mm wide x 900mm overall height. This heavy duty recessed preparation table has vertical sides at 90° to the horizontal around a level working surface. The Grade 304 stainless steel worktop is 1.2mm thick, with a 30mm recess.

The full stainless steel underframework includes cross bracing and round tubular legs with a Ø38.1mm outside diameter. Black plastic adjustable feet allow levelling.

Overall height is 900mm to the top of the raised perimeter edge, placing the level recessed working surface at 870mm.

Suitable for dry goods sorting and food preparation. The top has no fall or drainage outlet; wet applications require a separate liquid-removal procedure.

Standard lengths are 1200, 1500, 1800, 2000 and 2400mm, with 600, 650 or 700mm widths. A 750mm width is custom.

Short Form Specification

> **SPECIFICATION USE**
> Use this description when specifying this model.

Preparation Table Stainless Steel Grade 304 Heavy Duty 1.2mm Thickness 2000mm (L) x 600mm (W) x 900mm (H) with 30mm Recess, 90° Vertical Sides, Stainless Steel Framework and Adjustable Feet.

Detailed specification

- Worktop: Stainless Steel Grade 304
- Construction: Heavy Duty
- Worktop thickness: 1.2mm
- Length: 2000mm
- Width: 600mm
- Overall height to raised perimeter edge: 900mm
- Recessed working surface height: 870mm
- Recess depth: 30mm
- Recess sides: 90° Vertical
- Underframework: Full Stainless Steel
- Cross bracing: Included
- Legs: Round Tubular, Ø38.1mm Outside Diameter
- Feet: Black Plastic, Adjustable for Levelling
- Fall: None
- Drainage outlet: None

Product drawings and images

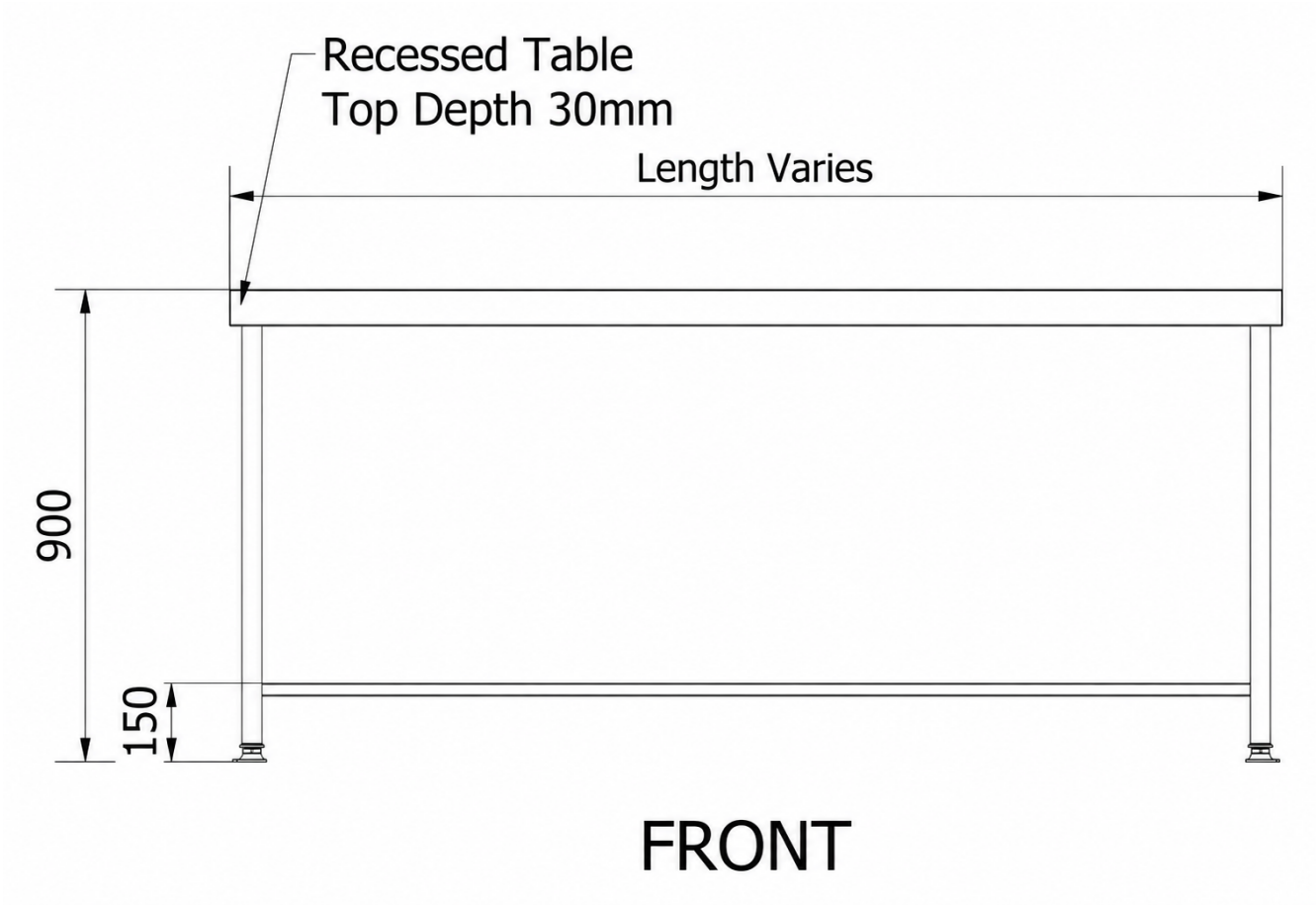

FRONT VIEW · Range front view. Length varies by configuration. Fixed dimensions are in millimetres.

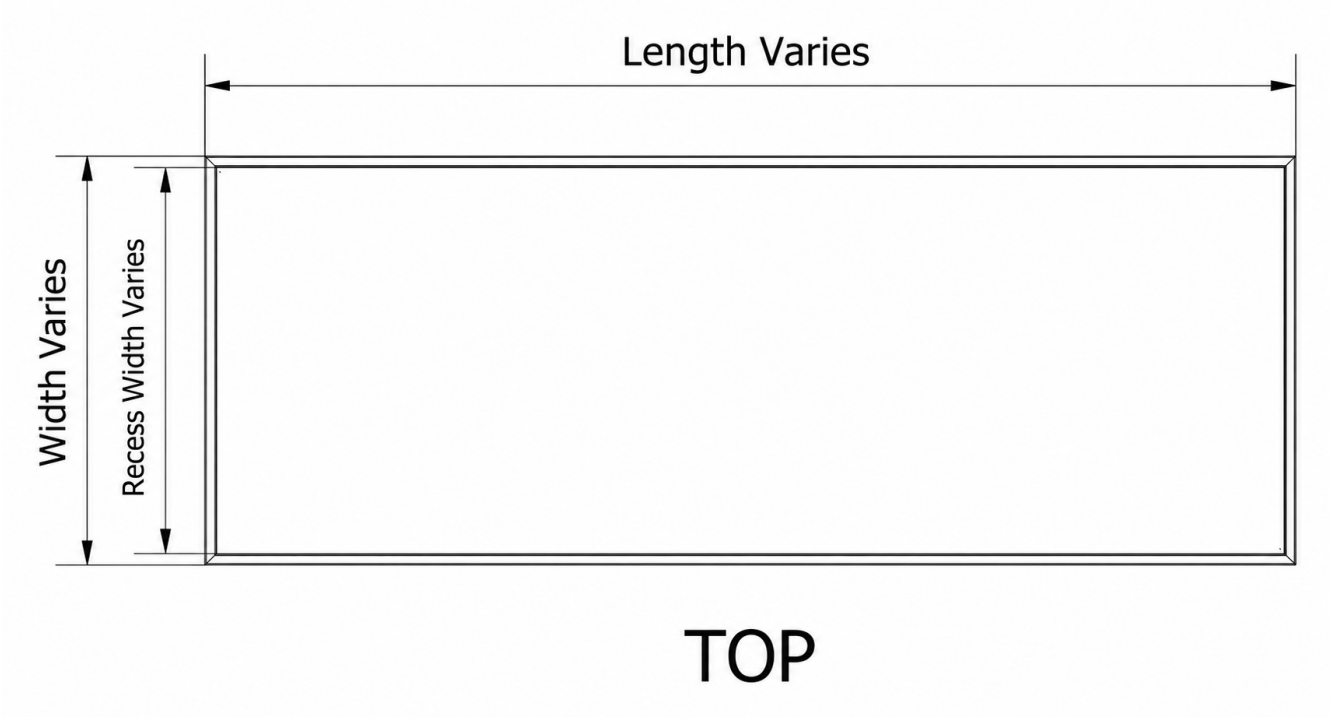

TOP VIEW · Range top view. Length, overall width and recess width vary by configuration.

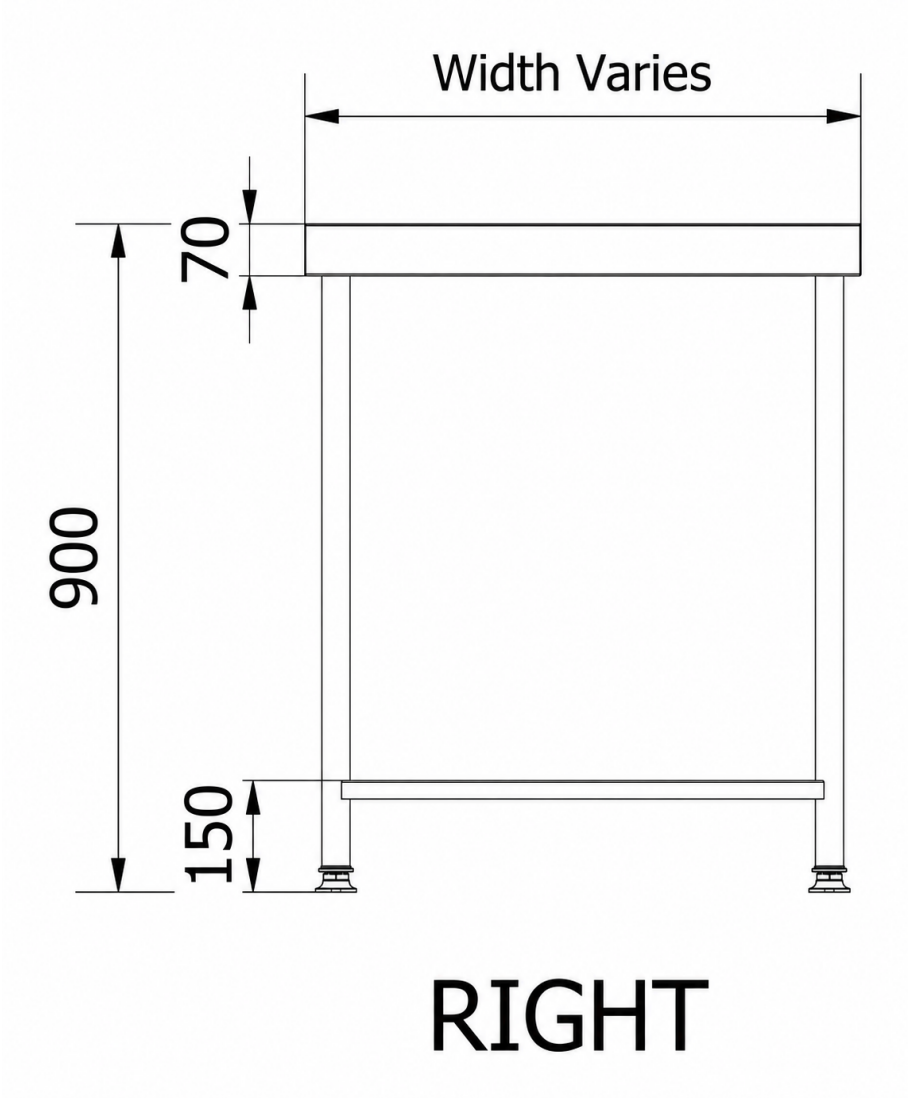

RIGHT VIEW · Range right view. Width varies by configuration. Fixed dimensions are in millimetres.

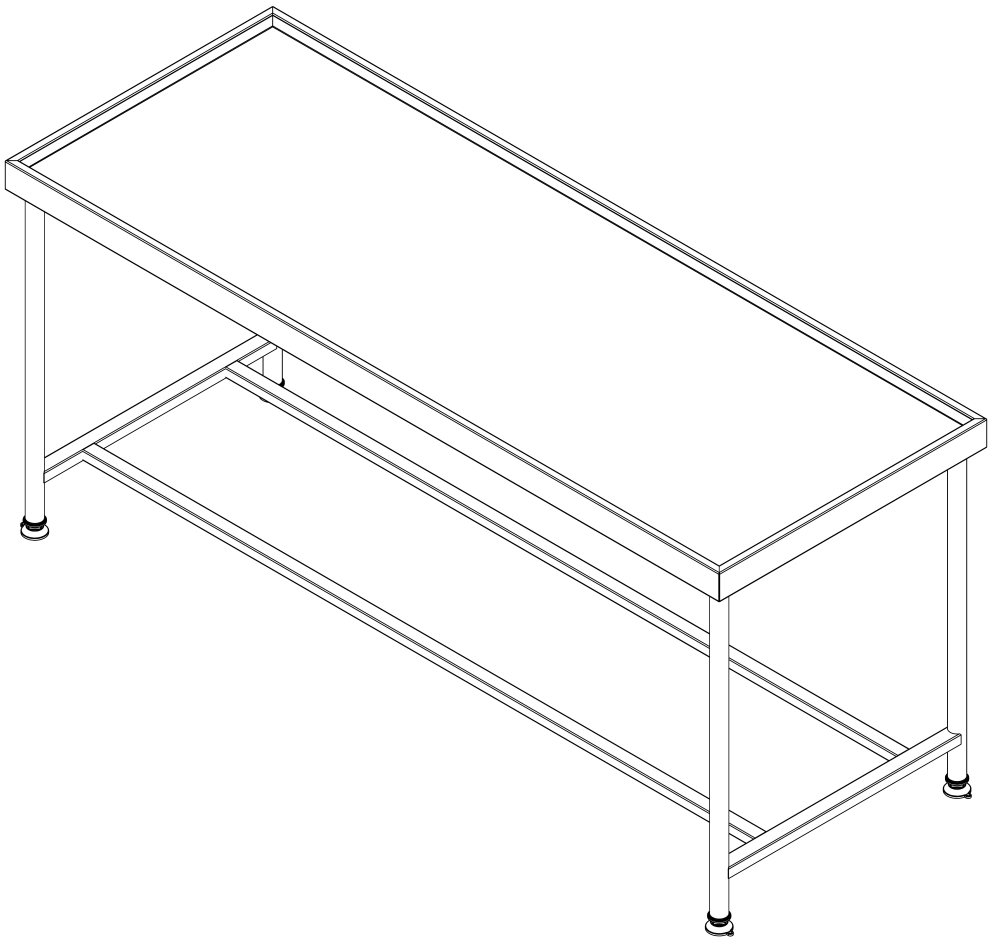

TOP RIGHT

ISOMETRIC VIEW · Representative straight-edge recessed preparation table. Length and width vary by configuration.

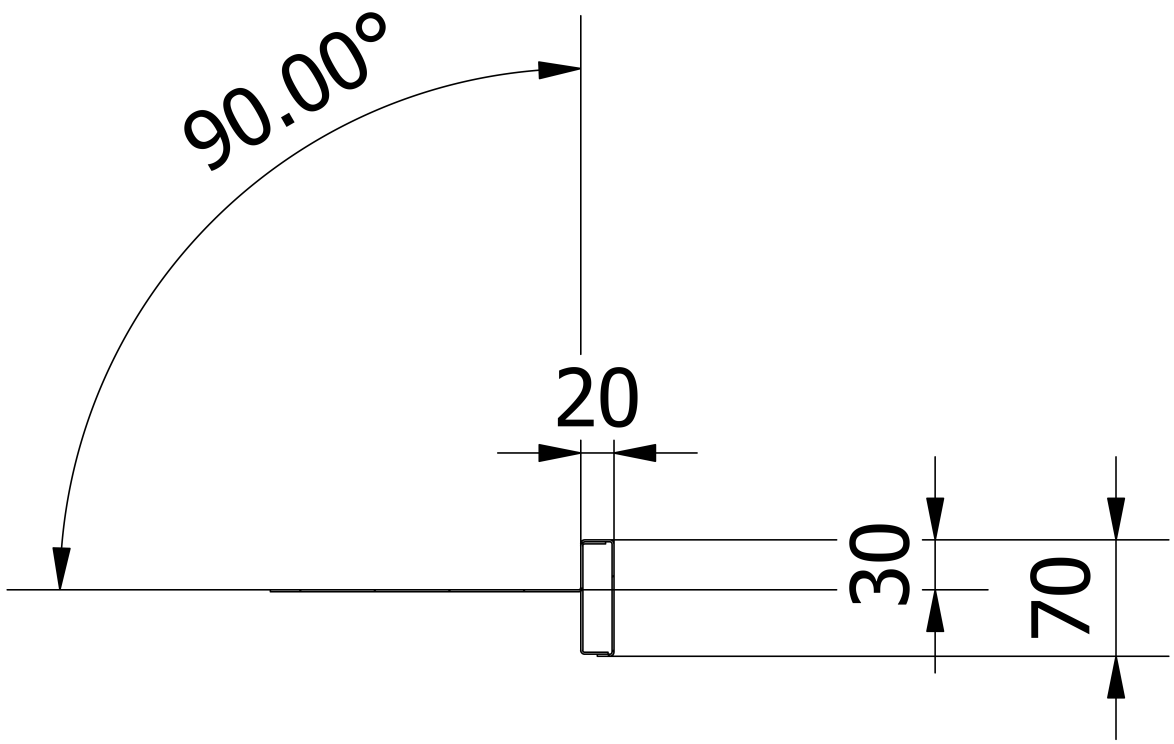

Edge Profile

DETAIL VIEW · Straight 90° edge profile with 30mm recess. Fixed profile dimensions are in millimetres.

VERIFICATION REQUIRED Published values are provided for initial specification. Confirm the selected model, critical dimensions, site services, clearances, and the latest document revision with Basterfield before procurement, manufacture, or installation. E&OE. Specifications are subject to change without notice.