PRODUCT RANGE SPECIFICATION

# H72211 – Stainless Steel Body Tray

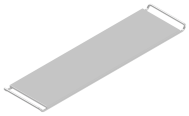

PRODUCT IMAGE

ⓘ Product image is representative of the range and may not reflect the actual item.

| DOCUMENT SCOPE | DOCUMENT REFERENCE | GENERATED ON |
|---|---|---|
| Product range | H72211{PSS} | 24 Nov 2026 |

**Detailed item specifications**

View available models and configuration options on the product page. Select a model to download its detailed specification sheet with dimensions, technical specifications and drawings. Scan the QR code or follow the link below.

https://basterfield.co.za/products/h72211-stainless-steel-body-tray#specifications

## 01 Product description and specification

**Product description**

Standard flat body tray for mortuary and pathology facilities, made from 1.2 mm Grade 304 stainless steel on a Ø25 mm tubular frame. Measures 2160 × 555 × 77 mm overall, including carry handles.

**Short Form Specification**

**SPECIFICATION USE**
Use this description when specifying this product range.

Basterfield H72211 standard body tray, manufactured from 1.2 mm Grade 304 stainless steel on a Ø25 mm tubular frame with integral carry handles. Overall dimensions: 2160 mm (L, including handles) × 555 mm (W) × 77 mm (H). Length excluding handles: 1960 mm. Standard flat tray surface.

## 02 Functional features

01 **Standard flat tray surface**
The flat surface makes H72211 the standard alternative to the recessed H72210 tray, with the same specified overall length, width and height.

02 **Grade 304 stainless steel**
The tray is manufactured from Grade 304 stainless steel, with the material grade specified for mortuary and pathology equipment schedules.

03 **1.2 mm tray thickness**
The tray is formed from 1.2 mm stainless steel sheet. This is the tray material thickness, separate from the overall 77 mm height of the unit.

04 **Ø25 mm tubular frame**
A tubular frame with a 25 mm diameter supports the tray and forms part of the overall body tray assembly.

05 **Integral carry handles**
Carry handles are included in the overall 2160 mm length. The length excluding handles is 1960 mm.

06 **Defined overall dimensions**
Overall dimensions of 2160 × 555 × 77 mm provide a clear reference for equipment schedules, space planning and rack or trolley fit checks.

## 03 Application information

| | |
|---|---|
| **Intended applications** | Mortuary Preparation |
| **Industries** | Pathology & Mortuary Services |

## 04 Supply and support

| | |
|---|---|
| **Typical lead time** | 10–15 working days |
| **Warranty** | 12 months |

## 05 Frequently asked questions

**What is the difference between H72210 and H72211?**

H72211 has a standard flat tray surface; H72210 has a recessed surface. Both use 1.2 mm Grade 304 stainless steel and a Ø25 mm tubular frame, with overall dimensions of 2160 × 555 × 77 mm. H72211 is the option to specify when a flat surface is required.

**What stainless steel grade and thickness are used?**

The H72211 tray is manufactured from Grade 304 stainless steel with a sheet thickness of 1.2 mm. The 1.2 mm measurement refers to the tray material, while 77 mm is the overall height of the complete tray assembly.

**What are the overall dimensions?**

H72211 measures 2160 mm long × 555 mm wide × 77 mm high overall. The length is 1960 mm when the carry handles are excluded.

**Does the 2160 mm length include the handles?**

Yes. The overall length of 2160 mm includes the integral carry handles. The length excluding handles is 1960 mm. Use the overall length when checking the space available for the complete tray.

**What type of frame supports the tray?**

The tray is supported by a Ø25 mm tubular frame. The diameter refers to the frame tube; the stainless steel tray sheet is 1.2 mm thick.

**Will this tray fit my existing body rack or trolley?**

Fit depends on the rack or trolley support arrangement as well as the tray dimensions. Send Basterfield the equipment model, support spacing and available clearances with your enquiry so compatibility can be checked before you order.

**Does the website price include VAT, and how do I request a quotation?**

The displayed unit price excludes VAT and is indicative. Choose the required quantity and select Add to quote for H72211. Final pricing and delivery will be confirmed in your quotation.

**Where can I find the product specification sheet?**

A downloadable product specification sheet is available in the Technical & documents section of this page. It provides product and dimensional information for comparison and equipment schedules.

## Product drawings and images

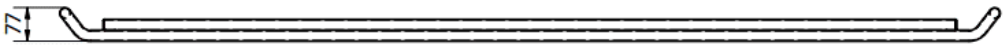


RIGHT

PRODUCT IMAGE

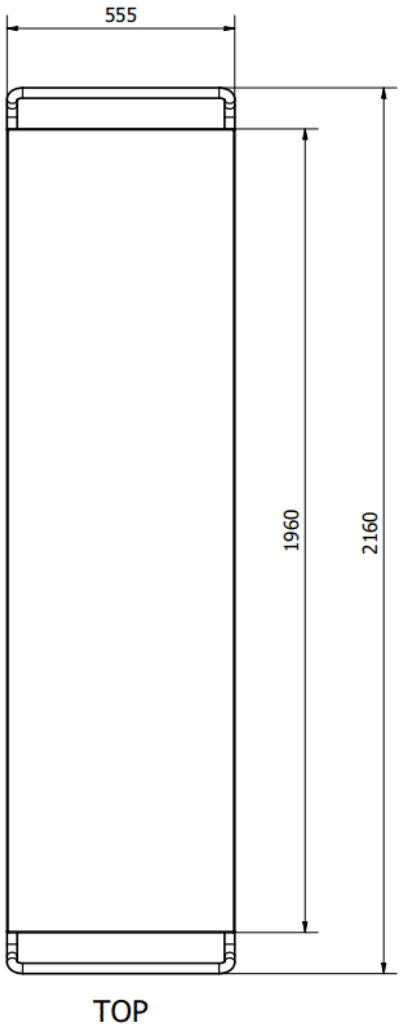


PRODUCT IMAGE

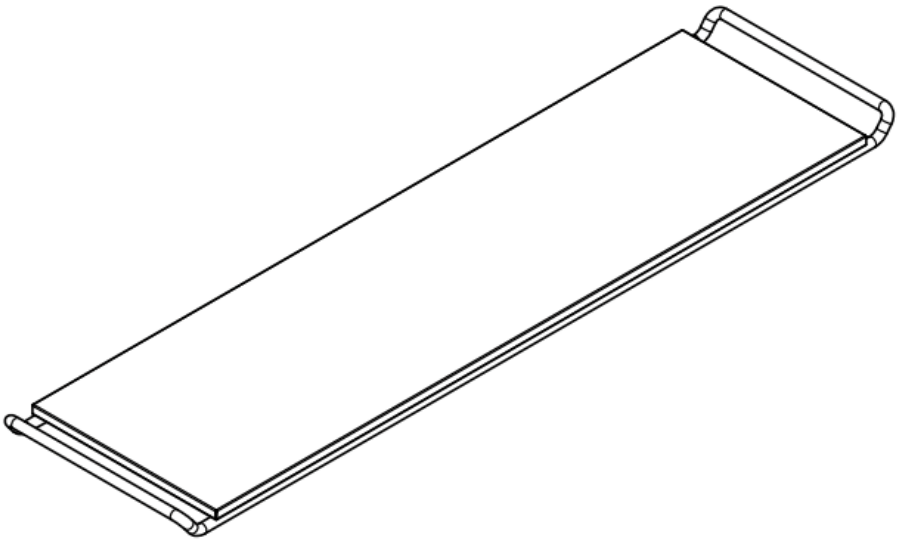

TOP RIGHT

PRODUCT IMAGE

E&OE. Specifications are subject to change without notice.