PRODUCT RANGE SPECIFICATION

H72212 – Stainless Steel Body Tray With Pressed Drainage



PRODUCT IMAGE · H72212 Grade 304 stainless steel body tray with pressed drainage formation, two drainage holes and integral carry handles

ⓘ Product image is representative of the range and may not reflect the actual item.

DOCUMENT SCOPE	DOCUMENT REFERENCE	GENERATED ON
Product range	**H72212{PSS}**	**29 Nov 2026**

Detailed item specifications

View available models and configuration options on the product page. Select a model to download its detailed specification sheet with dimensions, technical specifications and drawings. Scan the QR code or follow the link below.

https://basterfield.co.za/products/h72212-stainless-steel-body-tray-with-pressed-drainage#specifications

01 Product description and specification

Product description

Grade 304 stainless steel body tray with pressed drainage formation and two Ø20 mm drainage holes. Made from 1.2 mm sheet on a Ø25 mm tubular frame; 2080 × 555 × 76 mm overall, including handles.

Short Form Specification

SPECIFICATION USE
Use this description when specifying this product range.

Basterfield H72212 body tray in 1.2 mm Grade 304 stainless steel, with Ø25 mm tubular frame, integral carry handles, pressed drainage formation and two Ø20 mm drainage holes. Overall: 2080 mm (L, including handles) × 555 mm (W) × 76 mm (H). Length excluding handles: 1960 mm.

02 Technical specifications

PARAMETER	VALUE	UNIT	TECHNICAL NOTE
Material	Stainless Steel Grade 304	–	The primary material used in the construction of the item. Certain components may be manufactured from different materials.
Material Thickness	1.2	mm	The thickness of the material used for the item's primary construction. The thickness of individual components may vary.
Length	2080	mm	The length of the item typically as measured from left to right.
Length Excluding Handles	1960	mm	–

121 Koornhof Road, Meadowdale, Germiston, South Africa, 1614 · hello@basterfield.co.za · basterfield.co.za · +27 87 095 5357

02 Technical specifications

PARAMETER	VALUE	UNIT	TECHNICAL NOTE
Width	555	mm	The width of the item typically as measured from front to back.
Height	76	mm	Overall vertical envelope, including the splashback where fitted. For tables and sinks, this is distinct from working height.
Frame Tube Diameter	25	mm	–
Drainage	Pressed Drainage Formation	–	–
Drainage Hole Quantity	2	–	–
Drainage Hole Diameter	20	mm	–
Handle Type	Integral Carry Handles	–	The carrying handle construction fitted to this milk-can product.

03 Functional features

01 Pressed Drainage Formation
The pressed tray surface forms drainage paths towards the two openings shown on the top-view drawing.

02 Two Ø20 mm Drainage Holes
Two drainage holes, each 20 mm in diameter, are incorporated into the tray.

03 Grade 304 Stainless Steel
The tray is manufactured from Grade 304 stainless steel sheet with a thickness of 1.2 mm.

04 Ø25 mm Tubular Frame
The supporting tubular frame has a diameter of 25 mm.

05 Integral Carry Handles
Handles are incorporated at both ends. Overall length is 2080 mm; length excluding handles is 1960 mm.

06 2080 × 555 × 76 mm Overall
The overall length, width and height provide the dimensions needed for space planning and equipment fit checks.

04 Application information

Intended applications	Mortuary Preparation
Industries	Pathology & Mortuary Services

05 Supply and support

Typical lead time	10–15 working days
Warranty	12 months

06 Frequently asked questions

What material and thickness are used?

H72212 is made from Grade 304 stainless steel with a tray sheet thickness of 1.2 mm. The supporting tubular frame is Ø25 mm.

What are the overall dimensions?

Overall dimensions are 2080 mm long × 555 mm wide × 76 mm high. The length excluding the handles is 1960 mm.

Does the 2080 mm length include the handles?

Yes. The overall 2080 mm length includes the integral carry handles. The tray length excluding handles is 1960 mm.

How is the drainage formed?

The tray has a pressed drainage formation and two drainage holes, each Ø20 mm. The top-view drawing shows the pressed formation and both hole positions.

How does H72212 differ from H72210 and H72211?

H72212 has a pressed drainage formation and two Ø20 mm drainage holes, with overall dimensions of 2080 × 555 × 76 mm. H72210 has a recessed surface and H72211 a standard flat surface; both related models are specified at 2160 × 555 × 77 mm overall.

Will this tray fit an existing rack or trolley?

Check the rack or trolley support spacing, available clearances and tray profile against the H72212 drawings. Provide the equipment model and support dimensions with your enquiry so fit can be checked.

Does the price include VAT?

The displayed unit price excludes VAT. Add the required quantity to your quote request for confirmation of pricing and delivery.

Are drawings and a specification sheet available?

Yes. The product page includes the rendering, top, right and isometric drawing views, together with a downloadable specification sheet.

Product drawings and images

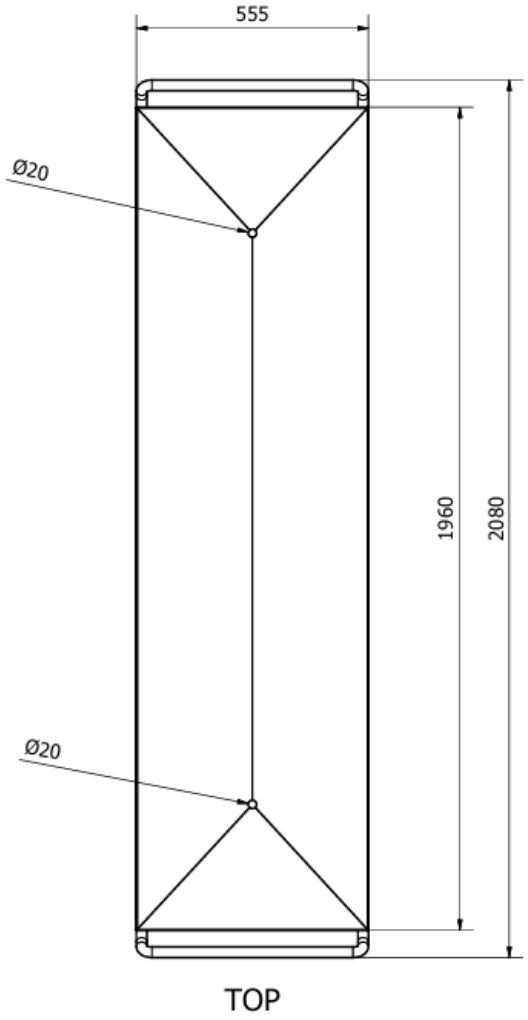

TOP VIEW · H72212 top drawing showing 2080 mm overall length, 1960 mm excluding handles, 555 mm width and two Ø20 mm drainage holes

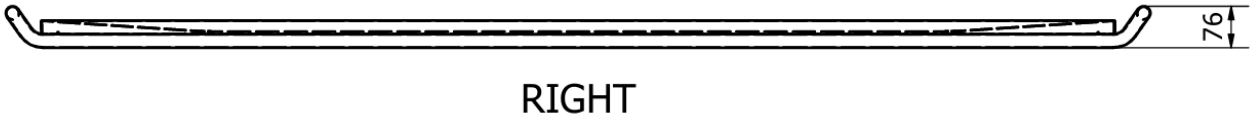

RIGHT VIEW · H72212 right-side drawing showing 76 mm overall height

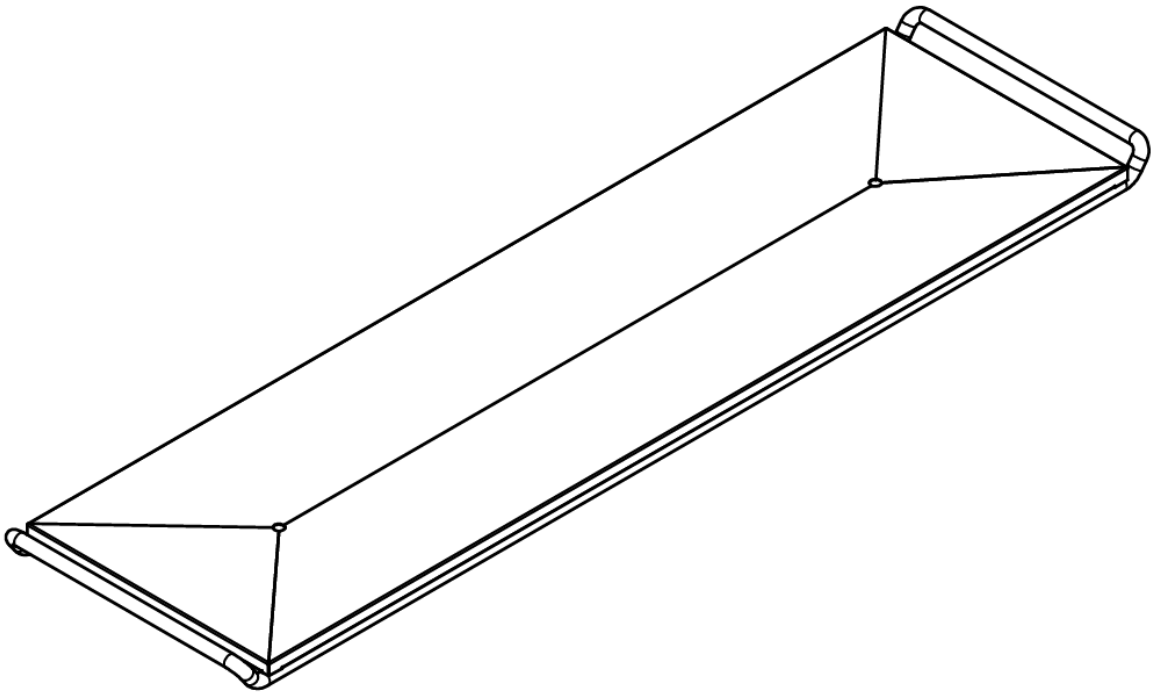

TOP RIGHT

ISOMETRIC VIEW · H72212 isometric drawing of the pressed drainage body tray and tubular frame

E&OE. Specifications are subject to change without notice.

121 Koornhof Road, Meadowdale, Germiston, South Africa, 1614 · hello@basterfield.co.za · basterfield.co.za · +27 87 095 5357